EQUIPMENT CONNECTION SCHEDULE

SYM.	EQUIPMENT	LOAD	VOLT/ PHASE	DISCONNECT TYPE	DISCONNECT RATING	DISCONNECT POLES	DISCONNECT TRIP/FUSE	DISCONNECT ENCLO.	CONDUCTORS	RACEWAY TYPE	RACEWAY SIZE	NOTES
1	AC-1	3.6HP, 2.8FLA, 7.8 + 4.7RLA	480/3	NFDS	30A	3	---	3R	3#10, 1#10G	LFMC	1/2"	
2	AC-2	1/3HP, 0.6FLA, 7.8 + 4.7RLA	480/3	NFDS	30A	3	---	3R	3#12, 1#12G	LFMC	1/2"	
3	AC-3	3.6HP, 1.5FLA, 7.8 + 4.7RLA	480/3	NFDS	30A	3	---	3R	3#10, 1#10G	LFMC	1/2"	
4	AC-4	2.0HP, 2.5FLA, 7.8 + 4.7RLA	480/3	NFDS	30A	3	---	3R	3#10, 1#10G	LFMC	1/2"	
5	AC-5	7.5HP, 3@3.5FLA, 14.1 + 2@16.8RLA	480/3	NFDS	100A	3	---	3R	3#10, 1#10G	LFMC	1/2"	
6	FAN #1	1.5FLA	480/3	DISCONNECT SWITCH PROVIDED WITH EQUIPMENT					3#12, 1#12G	LFMC	1/2"	
7	FAN #3	6.1FLA	480/3	DISCONNECT SWITCH PROVIDED WITH EQUIPMENT					3#12, 1#12G	LFMC	1/2"	
8	FAN #5,7,9	6.8FLA	480/3	DISCONNECT SWITCH PROVIDED WITH EQUIPMENT					3#12, 1#12G	LFMC	1/2"	
9	FAN #2 MUA FAN	1.1FLA	480/3	DISCONNECT SWITCH PROVIDED WITH EQUIPMENT					3#12, 1#12G	LFMC	1/2"	
10	FAN #4 MUA FAN	1.5FLA	480/3	DISCONNECT SWITCH PROVIDED WITH EQUIPMENT					3#12, 1#12G	LFMC	1/2"	
11	FAN #6 MUA FAN	6.8FLA	480/3	DISCONNECT SWITCH PROVIDED WITH EQUIPMENT					3#12, 1#12G	LFMC	1/2"	
12	FAN #8,10 MUA FAN	9.6FLA	480/3	DISCONNECT SWITCH PROVIDED WITH EQUIPMENT					3#12, 1#12G	LFMC	1/2"	
13	FAN #2 CONDENSER	6.3RLA	480/3	DISCONNECT SWITCH PROVIDED WITH EQUIPMENT					3#12, 1#12G	LFMC	1/2"	
14	FAN #4 CONDENSER	6.3RLA	480/3	DISCONNECT SWITCH PROVIDED WITH EQUIPMENT					3#12, 1#12G	LFMC	1/2"	
15	FAN #6 CONDENSER #1	6.3RLA	480/3	DISCONNECT SWITCH PROVIDED WITH EQUIPMENT					3#12, 1#12G	LFMC	1/2"	
16	FAN #6 CONDENSER #2	8.5RLA	480/3	DISCONNECT SWITCH PROVIDED WITH EQUIPMENT					3#12, 1#12G	LFMC	1/2"	
17	FAN #8,10 CONDENSER #1	8.5RLA	480/3	DISCONNECT SWITCH PROVIDED WITH EQUIPMENT					3#12, 1#12G	LFMC	1/2"	
18	FAN #8,10 CONDENSER #2	8.5RLA	480/3	DISCONNECT SWITCH PROVIDED WITH EQUIPMENT					3#12, 1#12G	LFMC	1/2"	
19	FAN #8,10 CONDENSER #3	8.5RLA	480/3	DISCONNECT SWITCH PROVIDED WITH EQUIPMENT					3#12, 1#12G	LFMC	1/2"	
20												

LEGEND

DISCONNECT TYPES
- ETCB = ELECTRONIC-TRIP CIRCUIT BREAKER
- FDS = FUSIBLE DISCONNECT SWITCH
- MCP = MOTOR CIRCUIT PROTECTOR
- NFDS = NON-FUSIBLE DISCONNECT SWITCH
- ST/DS = COMBINATION STARTER/DISCONNECT SWITCH
- TMCB = THERMAL-MAGNETIC CIRCUIT BREAKER
- TOG = HP RATED TOGGLE SWITCH

DISCONNECT ENCLOSURE TYPES
- 1 = NEMA 1 ENCLOSURE
- 3R = NEMA 3R ENCLOSURE
- 4 = NEMA 4 ENCLOSURE
- 4X = NEMA 4X ENCLOSURE
- FPN = FUSE PER NAMEPLATE

RACEWAY TYPES
- EMT = ELECTRIC METALLIC TUBING
- FMC = FLEXIBLE METAL CONDUIT
- IMC = INTERMEDIATE METAL CONDUIT
- LFMC = LIQUID-TIGHT FLEXIBLE METAL CONDUIT
- PVC = NON-METALLIC PVC CONDUIT
- RMC = RIGID METAL CONDUIT

STARTER TYPES
- CFVNR = COMBINATION FULL VOLTAGE, NONREVERSING

CONTROL DEVICES
- HOA = HAND-OFF-AUTO
- RPL = RED PILOT LIGHT
- AUX = AUXILIARY CONTACTS (2 N.O., 1 N.C.)
- CT50 = 50 VA CONTROL TRANSFORMER

NOTES

ALL ELECTRICAL CHARACTERISTICS SCHEDULED ABOVE ARE BASED ON INFORMATION AVAILABLE AT THE TIME OF DESIGN. ELECTRICAL CONTRACTOR SHALL VERIFY ELECTRICAL CHARACTERISTICS OF ALL EQUIPMENT WITH EQUIPMENT SUPPLIER(S) PRIOR TO ROUGHING, AND SHALL VERIFY EXACT LOCATION AND EXACT TYPE OF CONNECTION. ALL EQUIPMENT SHALL BE PROPERLY AND SECURELY GROUNDED. ANY SIGNIFICANT CHANGES IN LOCATION, ELECTRICAL REQUIREMENTS, OR TYPE OF CONNECTION REQUIRED FOR ANY EQUIPMENT SCHEDULED ABOVE SHALL BE BROUGHT TO THE ATTENTION OF THE ENGINEER IN WRITING PRIOR TO PROCEEDING.

CONDUCTORS AND RACEWAY SPECIFIED IN THE ABOVE SCHEDULE ARE FOR FINAL CONNECTION TO UNIT AND SHALL BE EXTENDED FROM THE DISCONNECT SHOWN ON THE FLOOR PLANS TO THE EQUIPMENT TERMINATION BOX.

CONDUIT AND BOXES REQUIRED FOR EQUIPMENT CONNECTIONS SHALL BE INSTALLED IN SUCH A WAY AS TO NOT COVER UP EQUIPMENT NAMEPLATES, SERVICE AREAS, AIR FLOW AREAS, ETC.

DRY-TYPE TRANSFORMER SCHEDULE

UNIT	LOCATION	KVA	PRIMARY	SECONDARY	TYPE	TEMP. RISE	MOUNTING	ENCLOSURE	NOTES
TDPP	ELECTRICAL 23	150	480V	208Y/120V	LINEAR	115'	PAD	TEV	

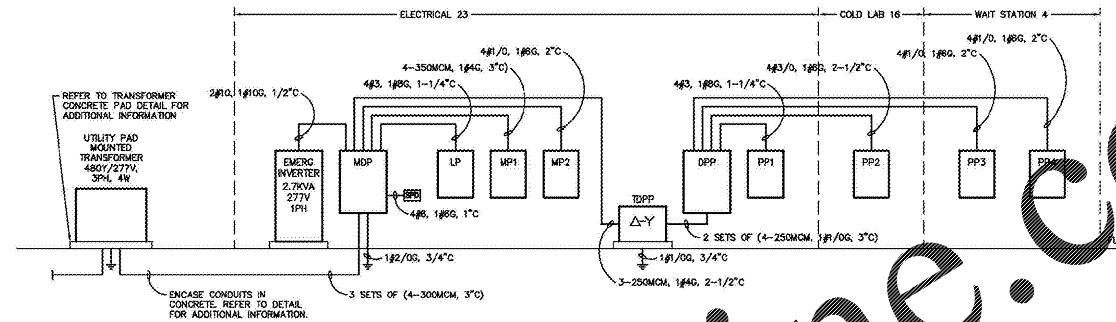

LOAD SUMMARY FOR SERVICE

LOAD	CONN. KVA	DEMAND KVA	DIVERSITY FACTOR
LIGHTS	10.2	12.8	0.9
RECEPTACLES	8.6	8.6	0.7
MOTORS	259.5	259.5	0.8
HEAT	10.8	10.8	0.8
KITCHEN	98.3	63.9	1.0
OTHER	6.0	6.0	1.0
TOTAL	393.5	361.6	

1 POWER RISER DIAGRAM
E-401 NOT TO SCALE

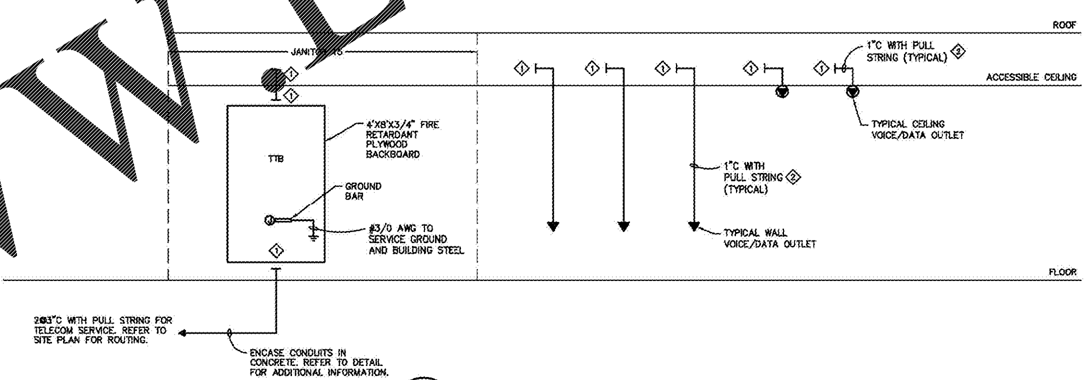

2 TELECOM RISER DIAGRAM
E-401 NOT TO SCALE

NOTES:
1. TERMINATE CONDUIT WITH PLASTIC BUSHING.
2. CABLING BY OTHERS.

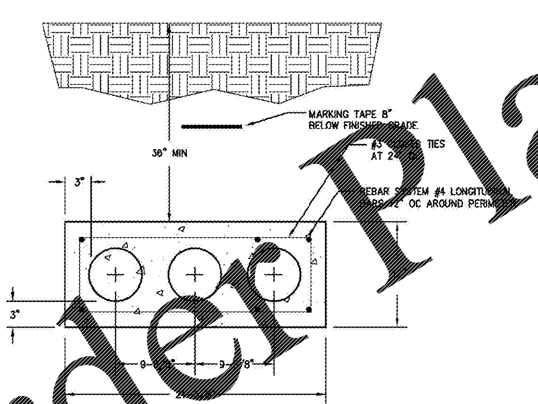

4 DETAIL – ELECTRICAL SERVICE DUCTBANK
E-401 NOT TO SCALE

FIRE ALARM MATRIX

OUTPUTS — CONTROL UNIT ANNUNCIATION: A ACTUATE COMMON ALARM SIGNAL INDICATOR; B ACTUATE AUDIBLE ALARM SIGNAL; C ACTUATE COMMON SUPERVISORY SIGNAL INDICATOR; D ACTUATE AUDIBLE SUPERVISORY SIGNAL; E ACTUATE COMMON TROUBLE SIGNAL INDICATOR; F ACTUATE AUDIBLE COMMON TROUBLE SIGNAL; G. NOTIFICATION: H ACTUATE BUILDING EMERGENCY VOICE/ALARM SIGNALS; I DISPLAY/PRINT CHANGE OF STATUS; J TRANSMIT FIRE ALARM SIGNAL TO SUPERVISING STATION; K TRANSMIT SUPERVISORY SIGNAL TO SUPERVISING STATION; L TRANSMIT TROUBLE SIGNAL TO SUPERVISING STATION; M. REQUIRED FIRE SAFETY CONTROL: N CLOSE ALL SMOKE DAMPERS; O SHUTDOWN ALL AIR HANDLERS; P ACTUATE SUPPRESSION SYSTEM PREDISCHARGE ALARMS; Q INITIATE SUPPRESSION SYSTEM RELEASING SEQUENCE; R ENERGIZE RELEASING SOLENOIDS; S SHUT OFF POWER TO HEAT PRODUCING EQUIPMENT UNDER HOOD; T; U.

	INPUTS	A	B	C	D	E	F	G	H	I	J	K	L	M	N	O	P	Q	R	S	T	U	
1	MANUAL FIRE ALARM BOXES	●	●						●	●	●				●	●							1
2	SMOKE DETECTORS – GENERAL PURPOSE	●	●						●	●	●				●	●							2
3	IN-DUCT SMOKE DETECTORS	●	●						●	●	●				●	●							3
4	HEAT DETECTORS – GENERAL PURPOSE	●	●						●	●	●				●	●							4
5	HEAT DETECTORS – (COLD LAB 14)	●	●						●	●	●				●	●	●	●	●				5
5	HEAT DETECTORS – (HOT LAB 2)	●	●						●	●	●				●	●	●	●	●				5
6	FIRE ALARM AC POWER FAILURE					●	●						●										6
7	FIRE ALARM SYSTEM LOW BATTERY					●	●						●										7
8	OPEN CIRCUIT					●	●						●										8
9	GROUND FAULT					●	●						●										9
10	NOTIFICATION APPLIANCE SHORT CIRCUIT					●	●						●										10
11	LOSS OF VOLTAGE – MOTORIZED DAMPER CONTROLS					●	●						●										11
12	UNDER HOOD KITCHEN EQUIPMENT SHUNT TRIP SUPERVISORY			●	●					●		●											12
13	AVTIVATION OF HOOD SUPPRESSION SYSTEM (REFER TO KITCHEN HOOD EQUIPMENT CONTROL DIAGRAM)	●	●						●	●	●				●	●							13
14	FAILURE OF SHUNT TRIP CONTROL POWER SUPPLY (REFER TO KITCHEN HOOD EQUIPMENT CONTROL DIAGRAM)					●	●						●										14

A B C D E F G H I J K L M N O P Q R S T U V

ALTERNATE #1

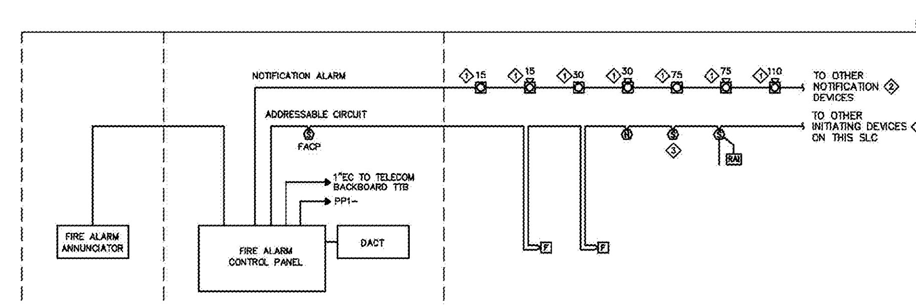

3 FIRE ALARM RISER DIAGRAM (ALTERNATE #1)
E-401 NOT TO SCALE

NOTES:
1. SUB-SCRIPT INDICATES THE CANDELLA RATING OF THE STROBE UNIT CONTAINED IN THE FIRE ALARM INDICATING DEVICE.
2. CONNECT DEVICES INDICATED TO THE SAME FIRE ALARM SIGNAL LOOP. LOOP NUMBER INDICATES DESIRED QUANTITY AND GROUPING OF FIRE ALARM DEVICES.
3. SMOKE DETECTORS SHALL NOT BE LOCATED IN DIRECT AIR FLOW NOR CLOSER THAN 3 FEET FROM AN AIR SUPPLY DIFFUSER.

WILKES COMMUNITY COLLEGE

SCO# 17-15764-01A
NCCCS# 2204

CULINARY LAB

McKNIGHT · SMITH WARD · GRIFFIN
ENGINEERS, INCORPORATED
PO Box 240828 • 4223 South Boulevard
Charlotte, NC F-0565
704/527-2112 17-013

LS3P
227 WEST TRADE STREET SUITE 700
CHARLOTTE, NORTH CAROLINA 28202
TEL. 704.333.6686 FAX 704.333.2926
WWW.LS3P.COM

NORTH CAROLINA PROFESSIONAL ENGINEER 12490 MARK P. ARRINGTON 01-02-2018

MEMBERS OF THE AMERICAN INSTITUTE OF ARCHITECTS

COPYRIGHT 2016 ALL RIGHTS RESERVED PRINTED OR ELECTRONIC DRAWINGS AND DOCUMENTATION MAY NOT BE REPRODUCED IN ANY FORM WITHOUT WRITTEN PERMISSION FROM LS3P ASSOCIATES LTD.

REVISIONS:

No.	Description	Date

PROJECT: 9202-169770
DATE: 1/2/18
DRAWN BY: SWB
CHECKED BY: MPA

RISER DIAGRAMS

E-401

BID SET January 2, 2018

C:\Users\sbrown.MSWG\Documents\17-013_WILKES CC CULINARY LAB_MSWG_MEP_2016_sbrown.rvt
1/3/2018 1:55:37 PM

Order Plans @ WWW.LDILine.com