STANDARD DRIVEWAY CONSTRUCTION
ENGINEERING DIVISION - CITY OF JACKSONVILLE, FLORIDA
PERMIT REQUIRED

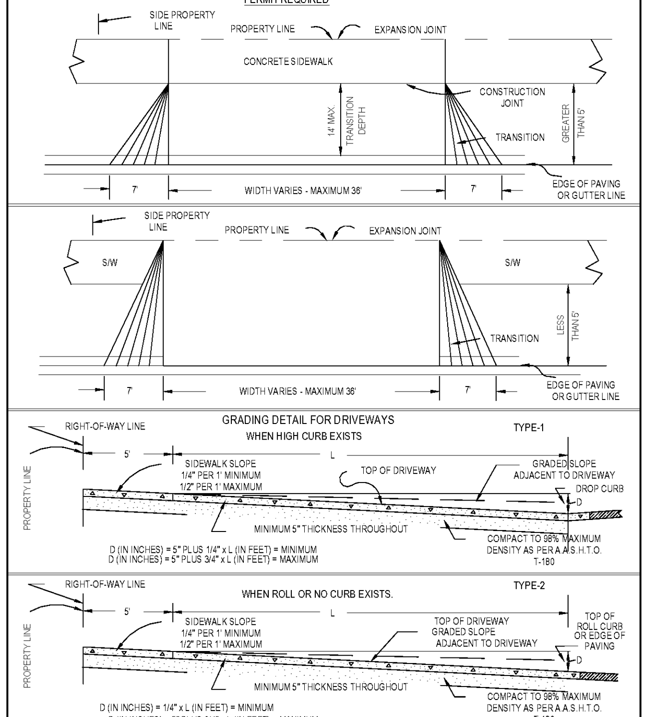

NOTE: MOST DRIVEWAY GRADES CAN BE MADE TO FIT THE ABOVE STANDARDS. DRIVEWAYS AND CROSS-OVERS TO BE A MINIMUM OF 2500 P.S.I. CONCRETE. DRIVEWAY NOT TO EXCEED LIMIT OF SIDE PROPERTY LINE. UNDERGROUND UTILITIES MAY EXIST ON SITE. CONTACTOR SHALL CONTACT PROPER AUTHORITIES PRIOR TO CONSTRUCTION.

OPTIONAL FLARED COMMERCIAL CONCRETE DRIVEWAY DETAILS	CITY OF JACKSONVILLE STANDARD	N.T.S.	PLATE P-206
		DATE DRAWN	JULY 1978
		REVISED DATE	9/5/03

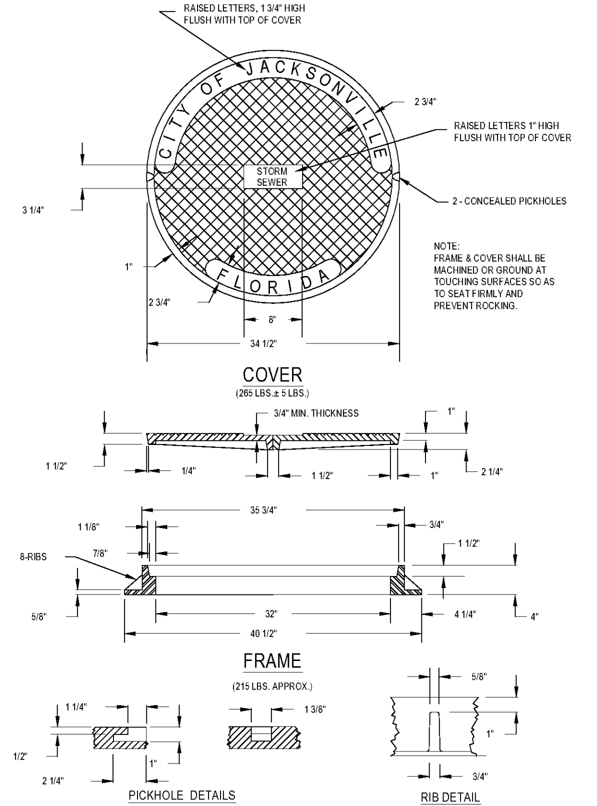

STORM SEWER MANHOLE COVER AND FRAME	CITY OF JACKSONVILLE STANDARD	N.T.S.	PLATE D-301
		DATE DRAWN	4-26-89
		REVISED DATE	5-12-94

GENERAL NOTE:
MORTAR USED TO SEAL THE PIPE INTO THE WALLS OF PRECAST UNITS WILL BE OF SUCH A MIX THAT SHRINKAGE WILL NOT CAUSE LEAKAGE INTO OR OUT OF THE UNITS. MAXIMUM OPENING FOR PIPE SHALL BE THE O.D. OF THE PIPE REQUIRED PLUS 6".

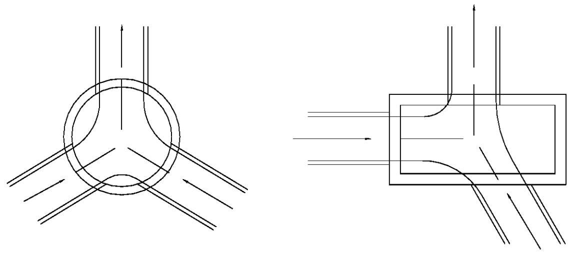

DETAIL OF CHANNELIZATION

NOTE: CHANNELIZATION REQUIRED AT ALL DRAINAGE STRUCTURES

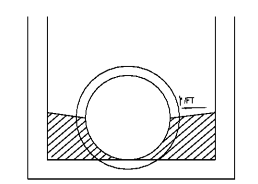

SMOOTH FLOW CHANNELS COMPOSED OF CONCRETE OR BRICK AND MORTAR SHALL BE CONSTRUCTED ON THE BOTTOMS OF ALL STRUCTURES TO A DEPTH EQUAL TO HALF THE DIAMETER OF THE LARGEST PIPE.

INVERT DETAIL	CITY OF JACKSONVILLE STANDARD	N.T.S.	PLATE D-212
		DATE DRAWN	8-5-1979
		REVISED DATE	5-12-94

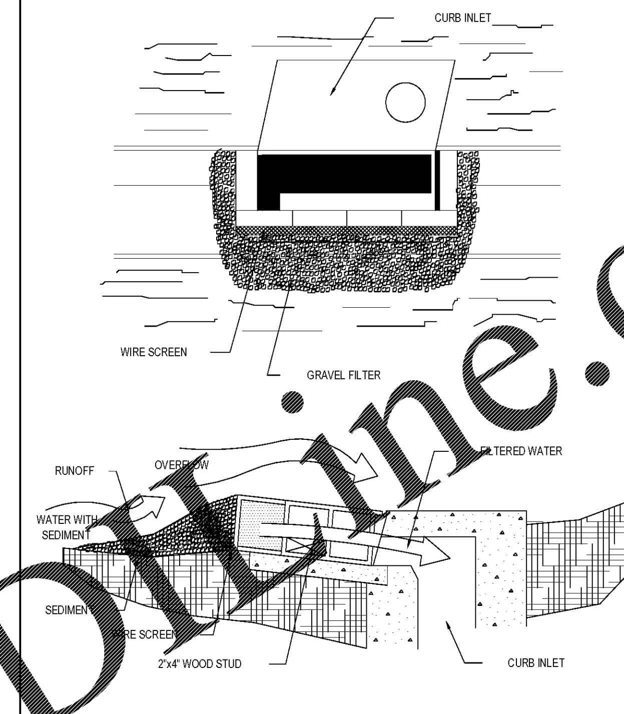

SPECIFIC APPLICATION

THIS METHOD OF INLET PROTECTION IS APPLICABLE AT CURB INLETS WHERE AN OVERFLOW CAPABILITY IS NECESSARY TO PREVENT EXCESSIVE PONDING IN FRONT OF THE STRUCTURE.

BLOCK AND GRAVEL CURB INLET SEDIMENT FILTER	CITY OF JACKSONVILLE STANDARD	N.T.S.	PLATE D-902
		DATE DRAWN	8-4-79
		REVISED DATE	5-12-94

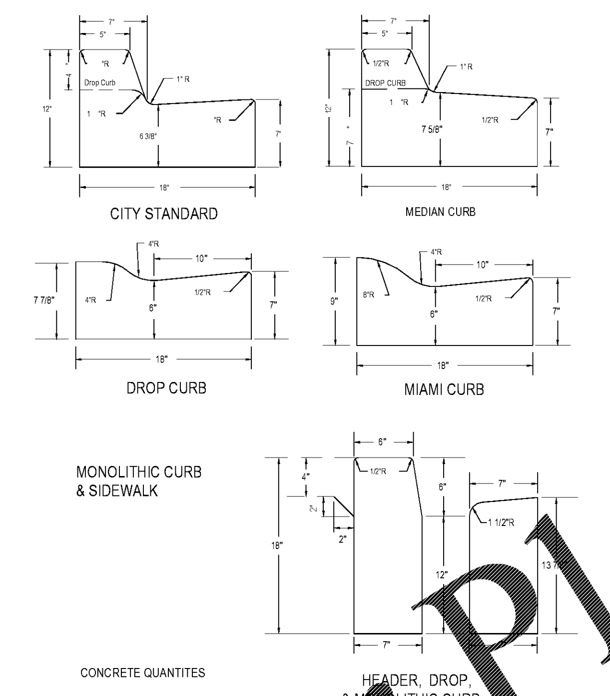

CONCRETE QUANTITES

CITY STANDARD CURB	.0388889	CU. YD./LIN. FT.
STANDARD DROP CURB	.0322222	CU. YD./LIN. FT.
MEDIAN CURB	.0411111	CU. YD./LIN. FT.
MIAMI CURB	.0325926	CU. YD./LIN. FT.
HEADER CURB	.0314815	CU. YD./LIN. FT.
HEADER DROP CURB	.024444	CU. YD./LIN. FT.

CITY STANDARD CURB TEMPLATES	CITY OF JACKSONVILLE STANDARD	N.T.S.	PLATE P-301
		DATE DRAWN	11-07-72
		REVISED DATE	08-12-81

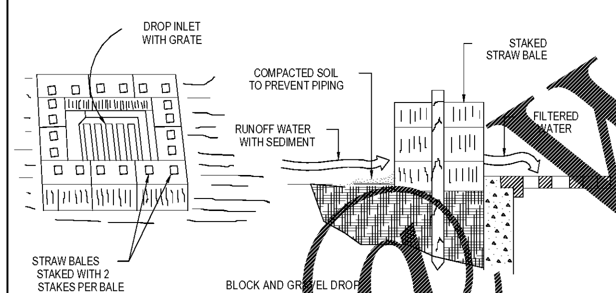

SPECIFIC APPLICATION

THIS METHOD OF INLET PROTECTION IS APPLICABLE WHERE THE INLET DRAINS A RELATIVELY FLAT AREA (SLOPES NO GREATER THAN 5 PERCENT) WHERE SHEET OR OVERLAND FLOWS (NOT EXCEEDING 0.5 cfs) ARE TYPICAL. THE METHOD SHALL NOT APPLY TO INLETS RECEIVING CONCENTRATED FLOWS, SUCH AS IN STREET OR HIGHWAY MEDIANS.

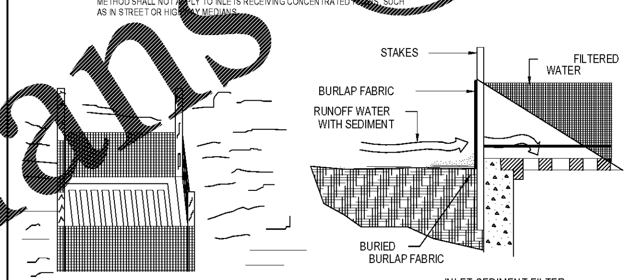

SPECIFIC APPLICATION

THIS METHOD OF INLET PROTECTION IS APPLICABLE WHERE THE INLET DRAINS A RELATIVELY FLAT AREA (SLOPES NO GREATER THAN 5 PERCENT) WHERE SHEET OR OVERLAND FLOWS (NOT EXCEEDING 0.5 cfs) ARE TYPICAL. THE METHOD SHALL NOT APPLY TO INLETS RECEIVING CONCENTRATED FLOWS, SUCH AS IN STREET OR HIGHWAY MEDIANS.

DROP INLET SEDIMENT FILTER	CITY OF JACKSONVILLE STANDARD	N.T.S.	PLATE D-905
		DATE DRAWN	8-5-79
		REVISED DATE	5-12-94

DIMENSIONS AND QUANTITIES

	D	X	[illegible]	[illegible]	C	E	F	G	H ■	M Single Pipe	M Double Pipe	M Triple Pipe	M Quad. Pipe	N	5½" Concrete Slab (CY) ◪ Single Pipe	Double Pipe	Triple Pipe	Quad. Pipe	Sodding (SY) Single Pipe	Double Pipe	Triple Pipe	Quad. Pipe
1:2 Slope	[illegible]	2'-7"	1.92'	[illegible]	4.10'	2.06'	5'	1.22'	2.9'	4.63'	7.21'	9.79'	12.37'	1.19'	0.38	0.58	0.77	0.96	21	24	27	30
	[illegible]	[illegible]-10"	1.97'	[illegible]	4.71'	2.56'	6'	1.41'	3.4'	4.92'	7.75'	10.58'	13.42'	1.21'	0.44	0.65	0.87	1.09	22	25	28	31
	24"	[illegible]	2.06'	[illegible]	5.91'	3.56'	7'	1.73'	3.4'	5.50'	8.92'	12.33'	15.75'	1.25'	0.54	0.83	1.12	1.42	24	28	32	35
	30"	[illegible]	2.15'	4.93'	7.10'	4.56'	8'	2.00'	3.4'	6.08'	10.33'	14.58'	18.83'	1.29'	0.66	1.09	1.50	1.91	26	31	35	40
	36"	[illegible]	[illegible]	6.09'	8.33'	5.56'	9'	2.24'	3.4'	6.67'	11.75'	16.83'	21.92'	1.33'	0.81	1.38	1.95	2.51	28	34	39	45
	42"	6'-0"	2.34'	7.21'	9.55'	6.56'	10'	2.45'	3.4'	7.25'	13.25'	19.25'	25.25'	1.38'	0.97	1.70	2.45	3.19	30	37	43	50
	48"	6'-9"	[illegible]	8.33'	10.76'	7.56'	11'	2.65'	3.4'	7.83'	14.58'	21.33'	28.08'	1.42'	1.13	2.04	2.93	3.84	32	39	47	54
	54"	7'-8"	2.52'	9.44'	11.96'	8.56'	12'	2.83'	3.4'	8.42'	16.08'	23.75'	31.42'	1.46'	1.31	2.44	3.58	4.72	34	42	51	59
	60"	8'-6"	2.62'	10.56'	13.18'	9.56'	13'	3.00'	4.4'	9.00'	17.50'	26.00'	34.50'	1.50'	1.51	2.89	4.28	5.68	36	45	55	64
	66"	9'-2"	2.71'	11.68'	14.39'	10.56'	15'	3.18'	4.4'	9.58'	18.75'	27.92'	37.08'	1.54'	1.68	3.25	4.84	6.43	38	48	58	68
	72"	10'-0"	2.80'	12.80'	15.60'	11.56'	16'	3.30'	4.4'	10.16'	20.16'	30.16'	40.16'	1.58'	1.89	3.74	5.59	7.45	40	51	62	73
1:4 Slope	15"	2'-7"	2.27'	4.09'	6.36'	4.03'	8'	1.22'	4.0'	4.63'	7.21'	9.79'	12.37'	1.19'	0.57	0.87	1.15	1.34	23	26	29	32
	18"	2'-10"	2.36'	5.12'	7.48'	5.03'	9'	1.41'	4.0'	4.92'	7.75'	10.58'	13.42'	1.21'	0.66	0.99	1.31	1.65	25	28	31	35
	24"	3'-5"	2.53'	7.18' △	9.71'	7.03' △	11'	1.73'	4.0'	5.50'	8.92'	12.33'	15.75'	1.25'	0.83	1.30	1.75	2.20	28	32	36	40
	30"	4'-3"	2.70'	9.25'	11.95'	9.03'	13'	2.00'	4.0'	6.08'	10.33'	14.58'	18.83'	1.29'	1.10	1.74	2.39	3.05	31	36	41	46
	36"	5'-1"	2.87'	11.31' ◇	14.18'	11.03' ◇	15'	2.24'	4.0'	6.67'	11.75'	16.83'	21.92'	1.33'	1.32	2.21	3.08	3.96	34	40	46	52
	42"	6'-0"	3.05'	13.37'	16.42'	13.03'	17'	2.45'	4.0'	7.25'	13.25'	19.25'	25.25'	1.38'	1.58	2.76	3.91	5.09	38	43	51	58
	48"	6'-9"	3.22'	15.43'	18.65'	15.03'	19'	2.65'	4.0'	7.83'	14.58'	21.33'	28.08'	1.42'	1.85	3.30	4.73	6.17	41	48	56	63
	54"	7'-8"	3.39'	17.49'	20.88'	17.03'	21'	2.83'	4.0'	8.42'	16.08'	23.75'	31.42'	1.46'	2.14	3.95	5.77	7.58	44	52	61	69
	60"	8'-6"	3.56'	19.55'	23.11'	19.03'	23'	3.00'	4.0'	9.00'	17.50'	26.00'	34.50'	1.50'	2.45	4.66	6.87	9.07	47	56	66	75
	66"	9'-2"	3.73'	21.62'	25.35'	21.03'	25'	3.18'	4.0'	9.58'	18.75'	27.92'	37.08'	1.54'	2.88	5.53	8.18	10.84	49	59	69	80
	72"	10'-0"	3.91'	23.68'	27.59'	23.03'	27'	3.30'	4.0'	10.16'	20.16'	30.16'	40.16'	1.58'	3.54	6.61	9.87	13.13	52	63	74	85

◪ See General Note No. 5.
See Sheet 5 For 3" Slab Quantities

■ Values shown for estimating pipe quantities and are for information only.

B	E	
△ 6.42'	△ 6.25'	Dimensions permitted to allow use of 8' standard pipe lengths.
◇ 10.40'	◇ 10.10'	Dimensions permitted to allow use of 12' standard pipe lengths.

△ ◇ Concrete slab shall be deepened to form bridge across crown of pipe. See section below.

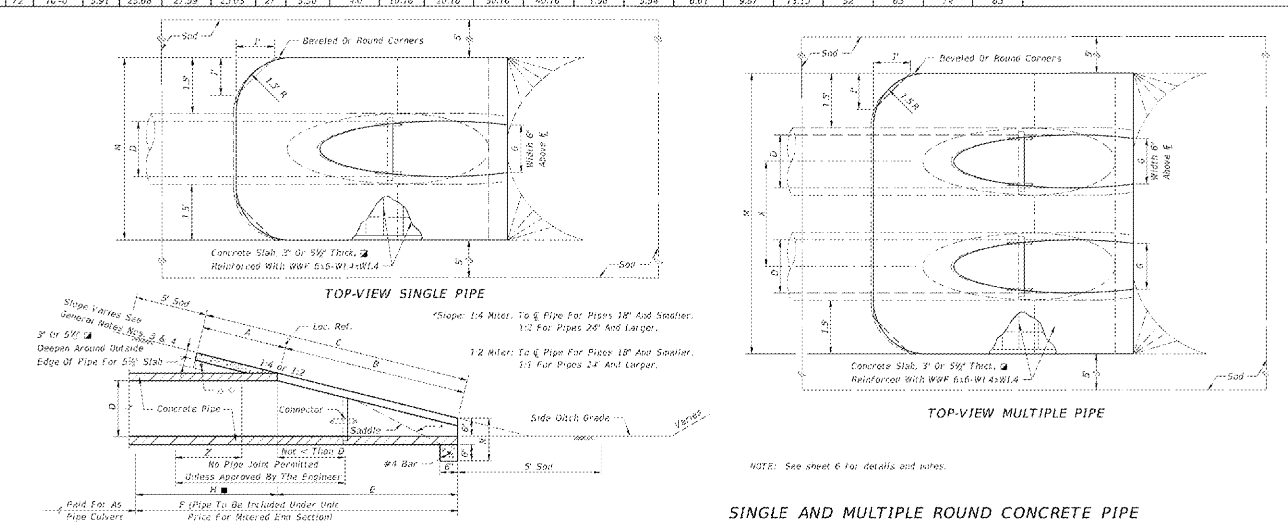

NOTE: See sheet 6 for details and notes.

SINGLE AND MULTIPLE ROUND CONCRETE PIPE

LAST REVISION 07/01/02	REVISION	DESCRIPTION:	FDOT FY 2016-17 DESIGN STANDARDS	CROSS DRAIN MITERED END SECTION	INDEX NO. 272	SHEET NO. 1 of 6

BOHLER ENGINEERING
SITE CIVIL AND CONSULTING ENGINEERING
LAND SURVEYING PROGRAM MANAGEMENT LANDSCAPE ARCHITECTURE
SUSTAINABLE DESIGN PERMITTING SERVICES TRANSPORTATION SERVICES
UPSTATE NEW YORK, NEW ENGLAND, BOSTON, MA, NEW YORK, NY, NEW YORK METRO, NORTHERN NEW JERSEY, SOUTHERN NEW JERSEY, PHILADELPHIA, PA, PITTSBURGH, PA, LEHIGH VALLEY, PA, SOUTHEASTERN, PA, REHOBOTH BEACH, DE, BALTIMORE, MD, SOUTHERN MARYLAND, NORTHERN VIRGINIA, CENTRAL VIRGINIA, RALEIGH, NC, WASHINGTON, DC, CHARLOTTE, NC, ATLANTA, GA, TAMPA, FL, SOUTH FLORIDA, DALLAS, TX

THE INFORMATION, DESIGN AND CONTENT OF THIS PLAN ARE PROPRIETARY AND SHALL NOT BE COPIED OR USED FOR ANY PURPOSE WITHOUT PRIOR WRITTEN AUTHORIZATION FROM BOHLER ENGINEERING. ONLY APPROVED, SIGNED AND SEALED PLANS SHALL BE UTILIZED FOR CONSTRUCTION PURPOSES
© 2017 BOHLER ENGINEERING

REVISIONS

REV	DATE	COMMENT	BY

811 KNOW WHAT'S BELOW ALWAYS CALL 811 BEFORE YOU DIG
It's fast. It's free. It's the law.
www.callsunshine.com

PERMIT SET

PROJECT No.:	FLT170090
DRAWN BY:	JDP
CHECKED BY:	GRR
DATE:	11/29/2017
SCALE:	AS NOTED
CAD I.D.:	SD0

PROJECT:

STARBUCKS COFFEE

FOR

BW McCORMICK, LLC

LOCATION OF SITE
McCORMICK RD
JACKSONVILLE, FL
CITY OF JACKSONVILLE

BOHLER ENGINEERING
3820 NORTHDALE BLVD., SUITE 300B
TAMPA, FLORIDA 33624
Phone: (813) 812-4100
Fax: (813) 812-4101
FLORIDA BUSINESS CERT. OF AUTH. No. 30780
LANDSCAPE ARCHITECT BUSINESS LIC. No LC26000551

GREGORY ROBERT ROTH
LICENSE No. 74560
STATE OF FLORIDA
PROFESSIONAL ENGINEER
12/15/2017

SHEET TITLE:

CONSTRUCTION DETAILS

SHEET NUMBER:

D-2

Order Plans @ WWW.LDILine.com