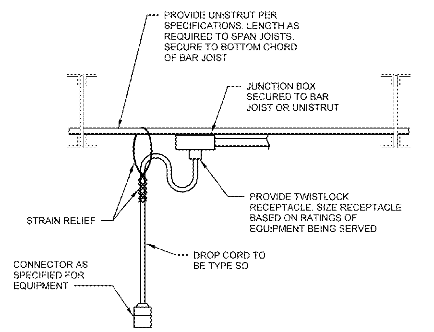

(13) SUSPENDED POWER DROP DETAIL
NTS 06.22.10 EG05

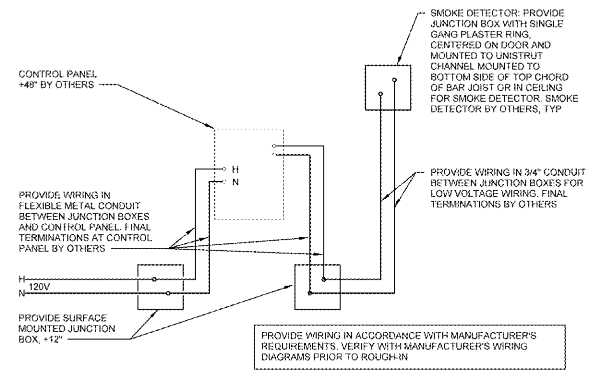

(12) ACCORDION FOLDING DOOR SCHEMATIC
NTS

VOICE/DATA ROUGH-IN SCHEDULE

10.28.05 ES02

DROP	ROUGH-IN NOTES:
a	FLUSH MOUNT JUNCTION BOX AT +20" (UNO) WITH (1) 3/4" CONDUIT STUBBED 12" ABOVE LAY-IN CEILING.
b	FLUSH MOUNT JUNCTION BOX AT +20" (UNO) WITH (1) 3/4" CONDUIT ROUTED TO NEAREST ACCESSIBLE CEILING SPACE.
c	SURFACE MOUNT JUNCTION BOX AT +66" (UNO) WITH (1) 3/4" CONDUIT STUBBED TO ACCESSIBLE CEILING SPACE.
d	SURFACE MOUNT JUNCTION BOX AT +60" WITH (1) 3/4" CONDUIT STUBBED TO CONDUIT SLEEVE.
e	SURFACE MOUNT WEATHER PROOF JUNCTION BOX AT TRUSS WITH (1) 3/4" CONDUIT ROUTED TO SEASONAL SHOP ACCESSIBLE CEILING SPACE.
f	MOUNT JUNCTION BOX WITHIN ENCLOSURE WITH (1) 3/4" CONDUIT STUBBED TO ACCESSIBLE CEILING SPACE.
g	SURFACE MOUNT WEATHER PROOF JUNCTION BOX 6" BELOW CEILING WITH (1) 3/4" CONDUIT STUB TO ACCESSIBLE CEILING SPACE.
h	FLUSH MOUNT 2 1/8" DEEP JUNCTION BOX WITH DOUBLE GANG PLASTER RING AT +20" WITH (2) 3/4" CONDUITS STUBBED 12" ABOVE LAY-IN CEILING.
j	SURFACE MOUNT JUNCTION BOX ADJACENT TO RACK CONTROLLER WITH (1) 3/4" CONDUIT STUBBED TO BUILDING ACCESSIBLE CEILING SPACE. COORDINATE RACK CONTROLLER JUNCTION BOX LOCATION WITH BAS INSTALLER.
k	SURFACE MOUNT WEATHER PROOF JUNCTION BOX AT +24" WITH (1) 3/4" CONDUIT ROUTED TO GARDEN CENTER (INSIDE SALES) ACCESSIBLE CEILING SPACE.

SCHEDULE GENERAL NOTES:

(1) ALL JUNCTION BOXES SHALL BE DOUBLE GANG WITH SINGLE GANG PLASTER RING UNLESS NOTED OTHERWISE ON SCHEDULE.
(2) ALL JUNCTION BOXES TO BE ROUGHED IN AT SCHEDULED HEIGHT UNLESS NOTED OTHERWISE ON DRAWINGS.
(3) ALL CONDUITS SHALL BE TERMINATED WITH BUSHINGS.
(4) PROVIDE PULL WIRE WITH EACH EMPTY RACEWAY (JUNCTION BOX/CONDUIT) INSTALLED.
(5) CONDUIT RUNS SHALL HAVE NO MORE THAN 90 DEGREES OF TRANSITION BETWEEN PULL BOXES.
(6) WHERE CONDUIT(S) TRAVERSE AREAS WITH CEILINGS OPEN TO STRUCTURE, CONDUIT(S) SHALL BE CONCEALED AS WELL AS POSSIBLE FROM VIEW FROM CUSTOMER AREA.
(7) FOR CONDUIT RUNS SCHEDULED WITH 1-1/2" OR LARGER CONDUIT UTILIZE LARGE RADIUS SWEEPS AT POINTS OF TRANSITION.
(8) ACCESSIBLE CEILING SPACE SHALL BE CONSIDERED 12 INCHES ABOVE A LAY-IN CEILING OR ABOVE BAR JOIST ACCESSIBLE BY A SCISSOR LIFT FOR AREAS OPEN TO STRUCTURE.
(9) WHEN CABLE TRAY IS NOT PROVIDED, STUB CONDUIT(S) TO TOP SIDE OF BOTTOM CHORD OF JOISTS AND EXTEND TO ACCESSIBLE CEILING SPACE ON SALES FLOOR.

GENERAL NOTES

1. PROVIDE SEALS AT RACEWAY PENETRATIONS AS FOLLOWS:
   A. FIRE RATED WALLS: SEAL PER SPECIFICATIONS FOR FIRE STOPPING.
   B. FREEZER/COOLER BOXES: SEAL WITH EXPANDING FOAM SEALANT.
   C. EXTERIOR: REFER TO ARCHITECTURAL DOCUMENTS FOR SEALING REQUIREMENTS AT ALL EXTERIOR MOUNTED DEVICES, FIXTURES, ENCLOSURES, AND RACEWAY PENETRATIONS.
2. PROVIDE A SEPARATE EQUIPMENT GROUNDING CONDUCTOR (SIZE PER NEC) IN PVC TYPE CONDUIT, POWER CIRCUITS, ISOLATED GROUND CIRCUITS, OR AS SHOWN ON PLANS. CONDUIT SHALL BE SIZED PER NEC BASED ON THWN 600 VOLT COPPER SINGLE CONDUCTORS, PLUS THE EQUIPMENT GROUNDING CONDUCTOR.
3. WIRING DEVICES: DEVICE MOUNTING HEIGHTS ARE FROM FINISHED FLOOR TO CENTER OF OUTLET BOX UNLESS NOTED OTHERWISE ON PLANS. COORDINATE THE STANDARD MOUNTING HEIGHTS WITH MASONRY:
   A. SWITCHES +44"
   B. RECEPTACLES +20"
   C. VOICE/DATA (REFER TO SCHEDULE)
4. WIRING SHALL INCLUDE FINAL CONNECTION TO ALL EQUIPMENT IN CONFORMANCE WITH EQUIPMENT SUPPLIER WIRING DIAGRAMS.
5. CONTRACTOR IS RESPONSIBLE FOR PROVIDING COMPLETE PANELBOARD IDENTIFICATION SCHEDULES.
6. BRANCH CIRCUIT CONDUCTORS SHALL BE MINIMUM #12 AWG UNLESS NOTED OTHERWISE IN SCHEDULES. WHERE 20A BRANCH CIRCUITS HAVE #8 AND LARGER WIRE SPECIFIED, #10 AWG WIRE SHALL BE USED FOR THE FINAL CONNECTION (6FT MAXIMUM).
7. WHERE BRANCH CIRCUITS ARE GROUPED, SIZE CONDUIT AND DERATE CURRENT CARRYING CONDUCTORS PER NEC.
8. PROVIDE HANDLE TIES ON MULTIWIRE BRANCH CIRCUITS TO MEET NEC REQUIREMENTS.
9. CONDUITS EXTENDING BEYOND EXTERIOR WALL: STUB OUT 2'-0" BELOW GRADE TO 5'-0" BEYOND EXTERIOR WALLS UNLESS NOTED OTHERWISE. COORDINATE LOCATION AND PROVIDE CONNECTION TO SITE CONDUITS.
10. DATA AND PHONE CONDUIT INSTALLATION MILESTONE DATE: ALL RACEWAY AND CONDUIT SLEEVES FOR DATA AND PHONE CABLING TO BE INSTALLED 3 WEEKS PRIOR TO CONTRACT SUBSTANTIAL COMPLETION DATE.
11. SUPPORTS FROM STRUCTURE: NO ATTACHMENT OF ANY TYPE SHALL BE MADE TO BRIDGING OR JOIST WEB MEMBERS. UTILIZE ONLY THE TOP AND BOTTOM CHORDS FOR SUPPORTING THE ELECTRICAL SYSTEM INSTALLATIONS. REF GENERAL ELECTRICAL CONNECTIONS TO STRUCTURE DETAIL.
12. DEVICES SHOWN ON COOLER/FREEZER PANELS SHALL BE SURFACE MOUNTED UNLESS NOTED OTHERWISE. REFER TO ARCHITECTURAL DOCUMENTS FOR CONDUIT INSTALLATION AND SEALING REQUIREMENTS.
13. ONLY FEEDER CIRCUITS SPECIFICALLY NOTED AS UNDERGROUND ON THE ONE LINE DIAGRAM AND BRANCH CIRCUITS NOTED BY LEGEND SHALL BE INSTALLED UNDER SLAB. ALL OTHER FEEDER AND BRANCH CIRCUITS SHALL BE INSTALLED OVERHEAD.
14. DO NOT INSTALL EQUIPMENT OR CONDUITS DIRECTLY UNDER SKYLIGHT WELLS UNLESS INDICATED OTHERWISE ON PLANS.
15. WHERE GROUPED CONDUITS ARE INSTALLED WITHIN THE JOIST SPACE, COORDINATE WITH SPRINKLER CONTRACTOR PRIOR TO INSTALLATION IN ORDER TO MAINTAIN REQUIRED CLEARANCES FROM SPRINKLERS

ELECTRICAL SYMBOLS LEGEND

10.29.10 ES03

(SYMBOLS APPLY ONLY WHEN USED ON DRAWINGS)

SYMBOL	DESCRIPTION
	FLUORESCENT / LED OR HID FIXTURE (WALL MOUNTED/CEILING MOUNTED)
	FLUORESCENT / LED FIXTURE
	FLUORESCENT / LED FIXTURE, NIGHT LIGHT
	VOLUMETRIC LED FIXTURE
	ENCLOSED FREEZER LIGHT
	TRACK LIGHTING
	EXIT FIXTURE (WALL MOUNTED/CEILING MOUNTED)
	EMERGENCY LIGHT (WALL MOUNTED/CEILING MOUNTED)
$	SINGLE POLE SWITCH
$3	3-WAY SWITCH
$4	4-WAY SWITCH
$K	KEYED SWITCH
$D	DIMMER SWITCH
	VARIABLE SPEED SWITCH
$M	MANUAL MOTOR SWITCH
$OS	SINGLE POLE OCCUPANCY SENSOR SWITCH
$OS2	DOUBLE POLE OCCUPANCY SENSOR SWITCH
OS	CEILING MOUNTED OCCUPANCY SENSOR SWITCH
	RECEPTACLE, DUPLEX
	RECEPTACLE, DUPLEX, MOUNTED HORIZONTALLY
	RECEPTACLE, GFI
	RECEPTACLE, DUPLEX FLUSH FLOOR
	RECEPTACLE, DUPLEX ISOLATED GROUND FLUSH FLOOR
	RECEPTACLE, DOUBLE DUPLEX
	RECEPTACLE, DUPLEX ISOLATED GROUND
	RECEPTACLE, DOUBLE DUPLEX, ISOLATED GROUND
	RECEPTACLE, SIMPLEX TWIST LOCK, L5-15R, UNO
	RECEPTACLE, SIMPLEX TWIST LOCK, ISOLATED GROUND, L5-15R, UNO
	RECEPTACLE, DUPLEX TWIST LOCK, L5-15R, UNO
	RECEPTACLE, DUPLEX TWIST LOCK, ISOLATED GROUND, L5-15R, UNO
	RECEPTACLE, SPECIAL
	RECEPTACLE, SIMPLEX
	RECEPTACLE, PLUG-MOLD
J	JUNCTION BOX (WALL MOUNTED/CEILING MOUNTED)
T	THERMOSTAT (WALL MOUNTED/CEILING MOUNTED)
A	ALARM JUNCTION BOX, (WALL MOUNTED/CEILING MOUNTED)
R	ALARM JUNCTION BOX, FOR REMOTE TEST/RESET (WALL MOUNTED/CEILING MOUNTED)
	EQUIPMENT CONNECTION POINT (PROVIDED WITH EQUIPMENT)
	NON-FUSED DISCONNECT
	FUSED DISCONNECT
	CIRCUIT, CONCEALED IN WALLS OR CEILING, E INDICATES EXISTING WIRING
	CIRCUIT, CONCEALED IN SLAB FLOOR, E INDICATES EXISTING WIRING
	CIRCUIT, EXPOSED, E INDICATES EXISTING WIRING
	CONDUIT SLEEVE
	FLUSH MOUNTED PANELBOARD
	SURFACE MOUNTED PANELBOARD
	MANUFACTURED WIRING SYSTEM
	TELEPHONE / DATA BOX FOR ISD
	LOW VOLTAGE CABLE BOX FOR OTHER
	TELEPHONE, FLUSH FLOOR
	MOTOR
	TELEPOWER POLE
	PUSH BUTTON
B	BUZZER
SS	SAIL SWITCH JUNCTION BOX
S	SMOKE DETECTOR
	HORN / STROBE
DH	DOOR HOLD OPEN

ABBREVIATIONS

CF	CEILING FAN
CO	CHECK OUT
CW	CASH/WRAP
EF	EXHAUST FAN
G	GROUND
GFI	GROUND FAULT CIRCUIT INTERRUPTER
IG	ISOLATED GROUND
REC	REFRIGERATION ELECTRICAL CONTRACTOR
RC	REFRIGERATION CONTRACTOR
RH	RADIANT HEATER
SC	SECURITY CAMERA
TR	TAMPER RESISTANT
UH	UNIT HEATER
WH	WATER HEATER
WP	WEATHER PROOF COVERPLATE
WR	WEATHER RESISTANT RECEPTACLE

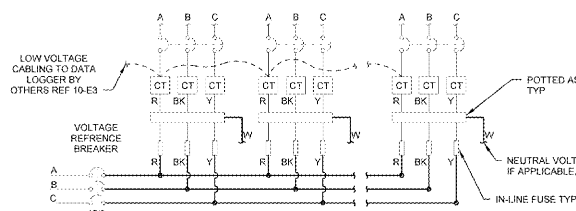

(11) VOLTAGE REFERENCE WIRING DIAGRAM
NTS 05.29.09 EP41

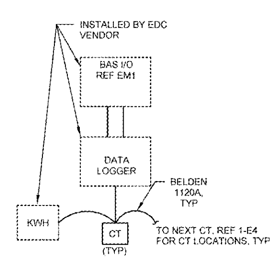

(10) SUB-METERING LOW VOLTAGE WIRING
NTS 10.28.11 EP40-1

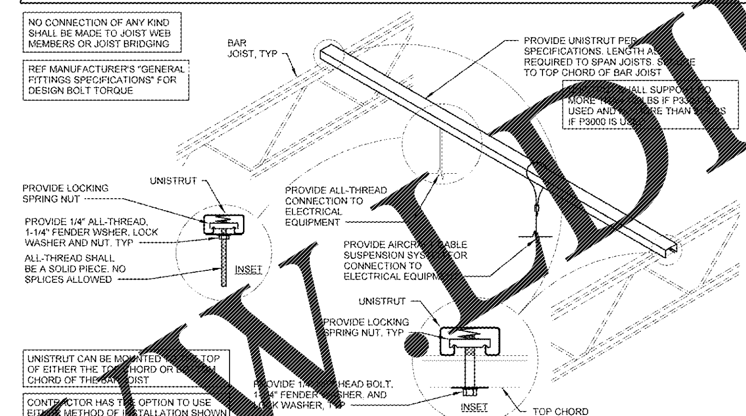

(9) GENERAL ELECTRICAL CONNECTIONS TO STRUCTURE
NTS 11.27.09 EL33

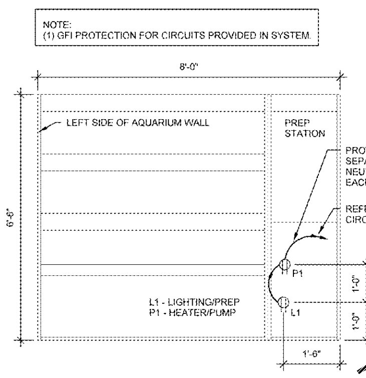

(8) AQUARIUM WALL POWER
NTS 09.26.08 EP06

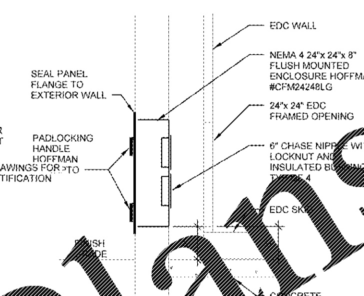

(7) PORTABLE GENERATOR "QC" CABLE RACEWAY
NTS 05.29.09 EP32

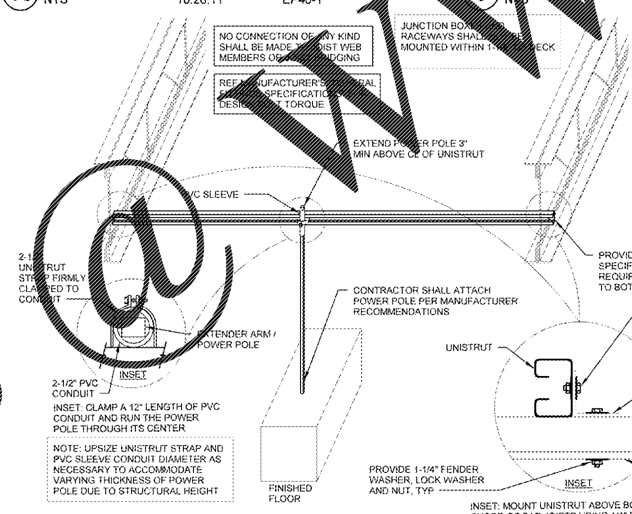

(6) POWER POLE CONNECTION
NTS 02.26.10 EP42

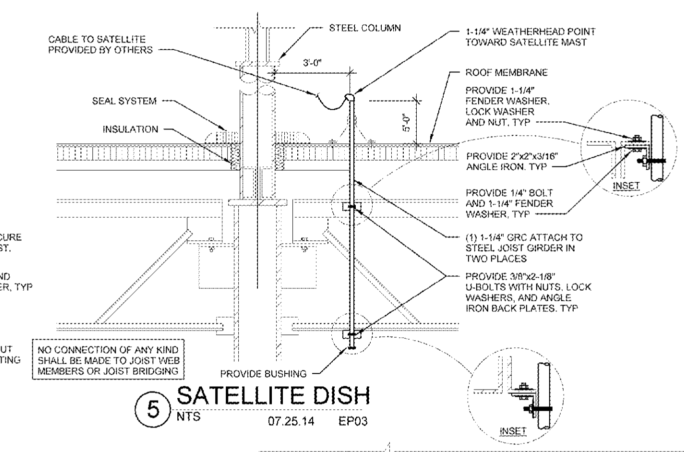

(5) SATELLITE DISH
NTS 07.25.14 EP03

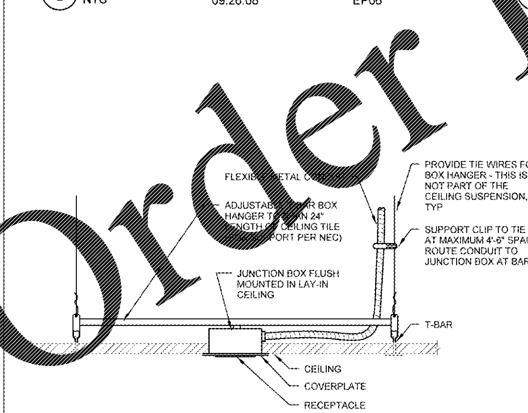

(4) CEILING MOUNTED RECEPTACLE
NTS 04.26.02 EP23

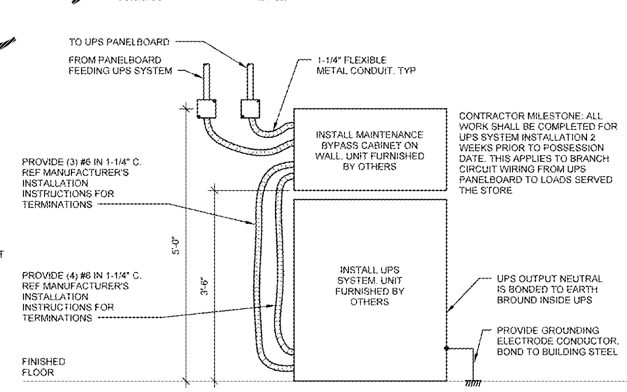

(3) UPS SYSTEM CONNECTION
NTS EP09

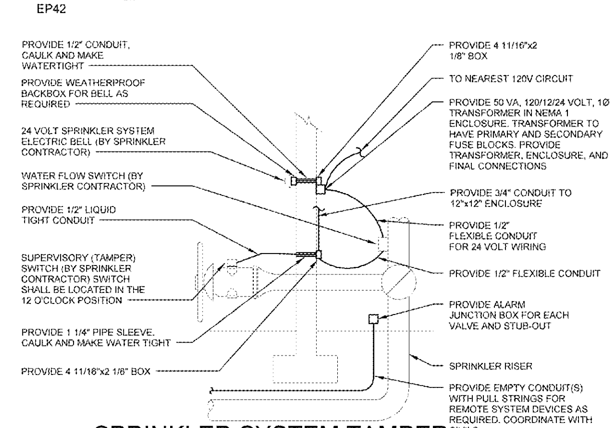

(2) SPRINKLER SYSTEM TAMPER AND FLOW SWITCH CONNECTION
NTS 10.28.11 EF11-1

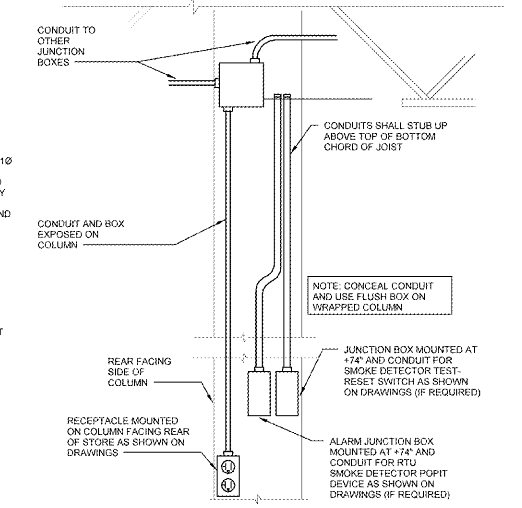

(1) COLUMN DEVICE MOUNTING
NTS 01.29.16 EP25

RETAIL DESIGN COLLABORATIVE

CONSULTANTS
Randall C. Haase P.E.
SUITE 5539 1605 N 2ND ST ROGERS, AR 72756 479-636-5004 800-321-6721

STIPULATION FOR REUSE
THIS DRAWING WAS PREPARED FOR USE ON A SPECIFIC SITE AT: LEESBURG, VIRGINIA CONTEMPORANEOUSLY WITH ITS ISSUE DATE ON 09/13/17 AND IT IS NOT SUITABLE FOR USE ON A DIFFERENT PROJECT SITE OR AT A LATER TIME. USE OF THIS DRAWING FOR REFERENCE OR EXAMPLE ON ANOTHER PROJECT REQUIRES THE SERVICES OF PROPERLY LICENSED ARCHITECTS AND ENGINEERS. REPRODUCTION OF THIS DRAWING FOR REUSE ON ANOTHER PROJECT IS NOT AUTHORIZED AND MAY BE CONTRARY TO THE LAW.

Walmart
LEESBURG, VIRGINIA
STORE NO: 1904
JOB NUMBER: 11080-26 PROTO 190 SGL-QL

ISSUE BLOCK
11/30/17 OTB

CHECKED BY:	SAG
DRAWN BY:	GAR
FILE NAME:	E3
PROTO CYCLE:	04/28/17
DOCUMENT DATE:	09/13/17

BID SET NOT FOR CONSTRUCTION

ELECTRICAL DETAILS, SYMBOLS, AND SCHEDULES

SHEET: E3

Order Plans @ www.LDIline.com