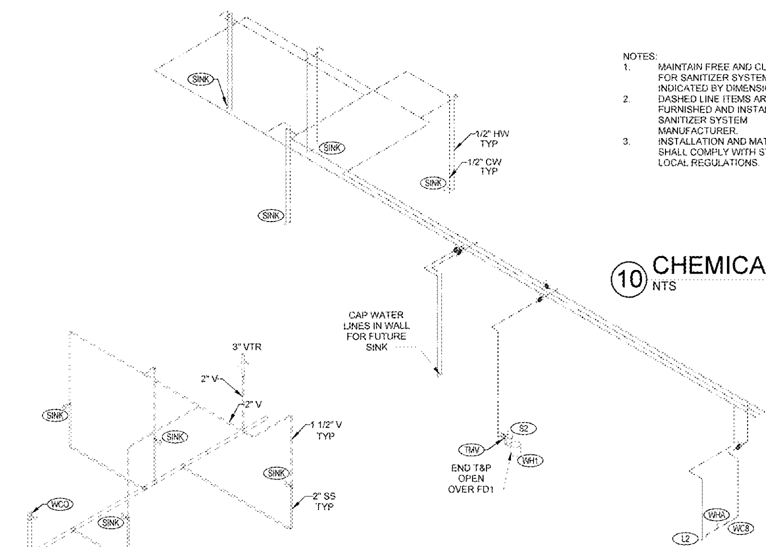


7 PHARMACY/VISION CENTERWATER RISER
NTS

NOTES:
1. MAINTAIN FREE AND CLEAR SPACE FOR SANITIZER SYSTEM AS INDICATED BY DIMENSIONS.
2. DASHED LINE ITEMS ARE FURNISHED AND INSTALLED BY SANITIZER SYSTEM MANUFACTURER.
3. INSTALLATION AND MATERIALS SHALL COMPLY WITH STATE AND LOCAL REGULATIONS.

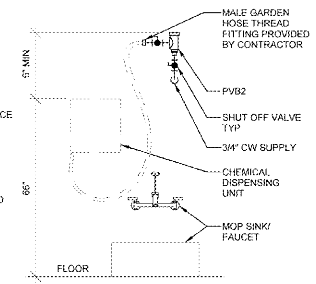


10 CHEMICAL DISPENSING UNIT ELEVATION
NTS

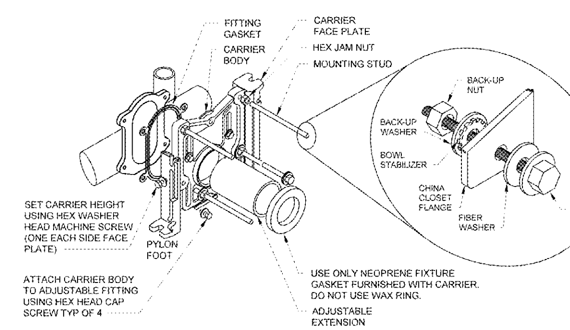


INSTALLATION NOTES:
1. INSTALL CARRIERS AND WATER CLOSETS IN ACCORDANCE WITH THE MANUFACTURER'S INSTALLATION INSTRUCTIONS.
2. INSTALL CENTERLINE OF CARRIER BOTTOM MOUNTING STUDS 5 3/4" ABOVE CONCRETE FOR WC3.
3. INSTALL CENTERLINE OF CARRIER BOTTOM MOUNTING STUDS 7 3/4" ABOVE CONCRETE FOR WC4.
4. AFTER WALL TILE INSTALLATION IS COMPLETE, SET CARRIER ADJUSTABLE EXTENSION AND CUT MOUNTING STUDS TO CORRECT LENGTH USING CARRIER MANUFACTURER FURNISHED JIG. PERFORM THIS TASK PRIOR TO SETTING THE BOWL.

9 CARRIER/WATER CLOSET INSTALLATION
NTS

INSTALLATION INSTRUCTIONS:
1. INSTALL FLOOR ANCHORS IN ACCORDANCE WITH MANUFACTURER'S INSTALLATION INSTRUCTIONS.
2. COMPLETELY FILL ANY SLIGHTLY MISALIGNED FLOOR ANCHOR HOLES WITH EPOXY-BONDED CONCRETE BEFORE RE-DRILLING HOLE.
3. REF CARRIER/WATER CLOSET INSTALLATION DETAIL.

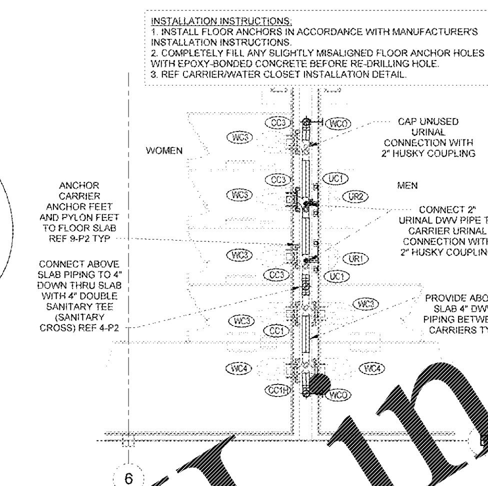


8 FRONT RESTROOM CARRIERS
1/4" = 1'-0"

## KEYNOTES

| | |
|---|---|
| 15.100 | ROUTE PIPING THROUGH JOIST SPACE. COORDINATE WITH HVAC AND OTHER TRADES PRIOR TO INSTALLATION. DO NOT INSTALL PIPING DIRECTLY UNDER SKYLIGHT WELLS UNLESS INDICATED OTHERWISE ON PLANS. COORDINATE WITH SPRINKLER CONTRACTOR PRIOR TO INSTALLATION IN ORDER TO MAINTAIN REQUIRED CLEARANCES FROM SPRINKLERS. REFER TO PIPE SUPPORT DETAIL FOR INSTALLATION. |
| 15.102 | MOUNT SHUT-OFF VALVE ABOVE ACCESSIBLE CEILING AT 14 FT. AFF UNLESS NOTED OTHERWISE. SUSPEND SIGN FROM COLD WATER LINE NEXT TO VALVE ABOVE CEILING TO READ AS FOLLOWS: "TENANT WATER [illegible] SHUT-OFF VALVE". |
| 15.105 | INSTALL FURNISHED WATER FILTRATION SYSTEM DISPENSING UNIT. REF ARCH FOR MOUNTING HEIGHT. CENTERLINE [illegible] SHALL BE 6" FROM EDGE OF COUNTER. INSTALL [illegible] FAUCET IN 4TH SINK HOLE. |
| 15.106 | INSTALL FURNISHED WATER FILTRATION SYSTEM AND WATER STORAGE TANK. INSTALL UNDER COUNTER PER MANUFACTURER'S SPECIFICATIONS. |
| 15.124 | BLOCK OUT [illegible] AREA AROUND EACH PUBLIC RESTROOM FLOOR DRAIN AT INITIAL SLAB POUR. AFTER RESTROOM WALLS ARE CONSTRUCTED, ALIGN DRAIN GRATE SQUARE TO WALLS AND SET IN CONCRETE PRIOR TO TILE INSTALLATION. VERIFY FINAL TILE HEIGHT BEFORE SETTING DRAIN. DO NOT SLOPE RESTROOM FLOOR TO DRAIN. |
| 15.127 | INSTALL BRANCH LINE CONNECTION FITTING WITH INLET ROTATED UP 15° MINIMUM ABOVE HORIZONTAL TO PREVENT BACKFLOW. REFER TO DWV BRANCH CONNECTION DOWNSTREAM OF TOILET DETAIL. |
| 15.128 | CONNECT DWV BRANCH LINE TO HORIZONTAL MAIN USING 1/8TH BEND AND WYE FITTING OR COMBINATION FITTING TO PREVENT BACKFLOW. DO NOT USE A SANITARY TEE FITTING. |

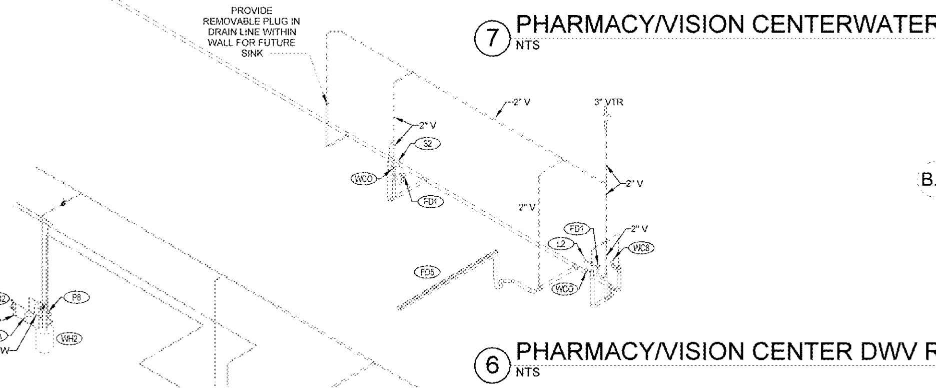


6 PHARMACY/VISION CENTER DWV RISER
NTS

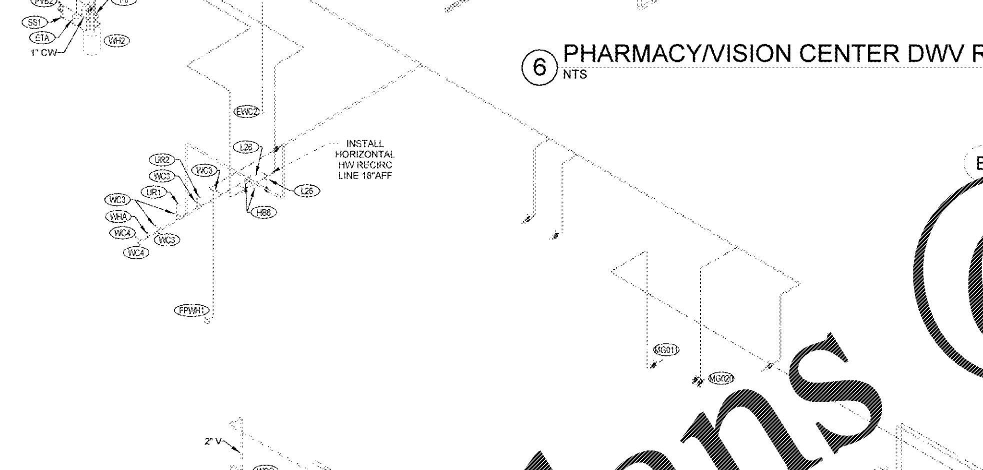


3 VESTIBULE WATER RISER
NTS

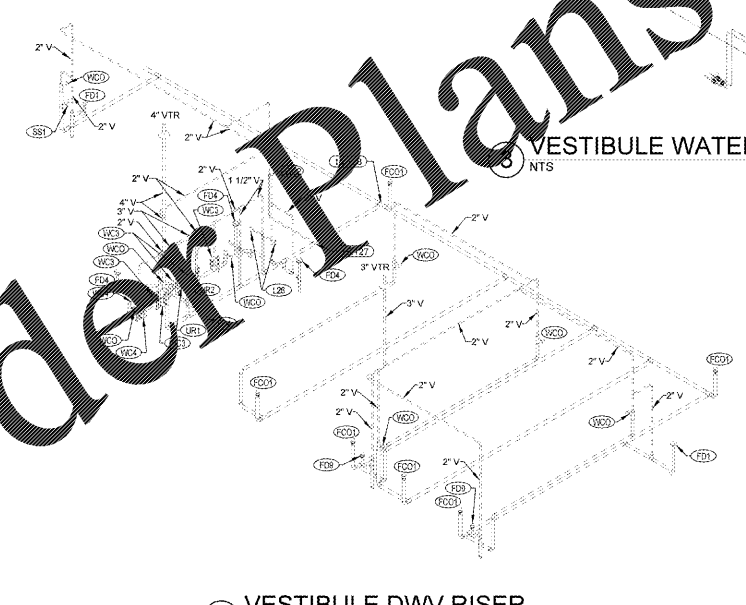


2 VESTIBULE DWV RISER
NTS

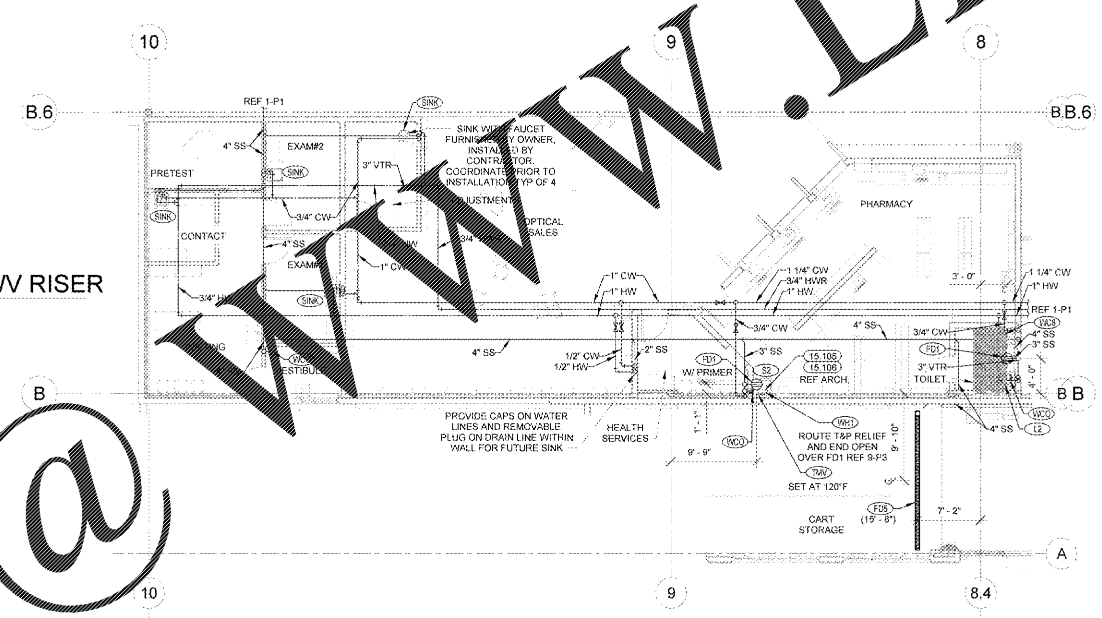


5 PHARMACY/VISION CENTER PLUMBING PLAN
1/8" = 1'-0"

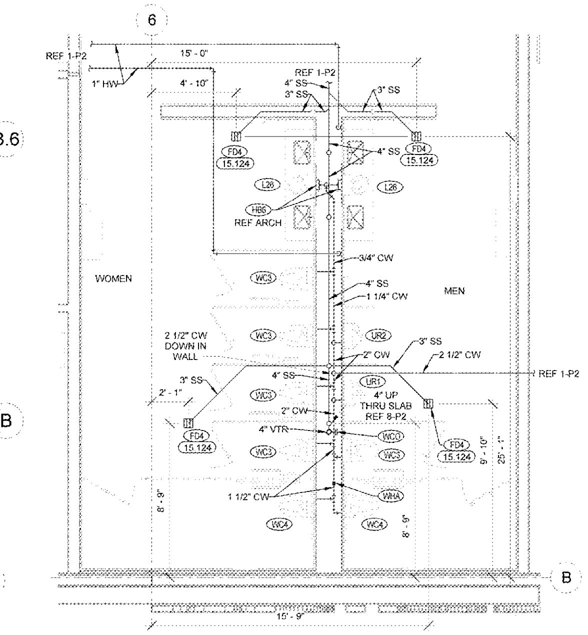


4 FRONT RESTROOM PLUMBING PLAN
1/4" = 1'-0"

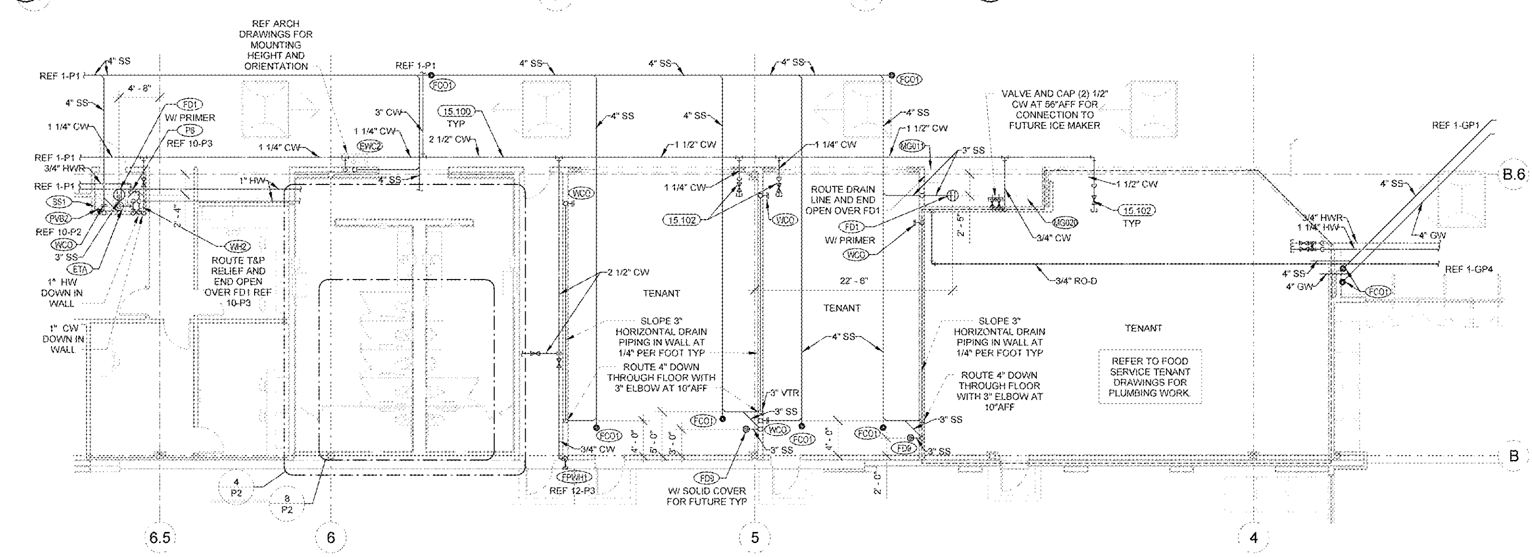


1 VESTIBULE PLUMBING PLAN
1/8" = 1'-0"

RETAIL DESIGN COLLABORATIVE
[illegible] Street
[illegible], CA 90802
562.628.[illegible]
rdcollabora[illegible].com

STIPULATION FOR REUSE
THIS DRAWING WAS PREPARED FOR USE ON A SPECIFIC SITE AT: LEESBURG, VIRGINIA CONTEMPORANEOUSLY WITH ITS ISSUE DATE ON 09/13/17 AND IT IS NOT SUITABLE FOR USE ON A DIFFERENT PROJECT SITE OR AT A LATER TIME. USE OF THIS DRAWING FOR REFERENCE OR EXAMPLE ON ANOTHER PROJECT REQUIRES THE SERVICES OF PROPERLY LICENSED ARCHITECTS AND ENGINEERS. REPRODUCTION OF THIS DRAWING FOR REUSE ON ANOTHER PROJECT IS NOT AUTHORIZED AND MAY BE CONTRARY TO THE LAW.

CONSULTANTS
David P. Kimball P.E.
SUITE 5238
1805 N 2ND ST
ROGERS, AR 72756
479-636-5004 800-321-8721
JOB NO.: 15586
DESIGNED BY: JOS

Walmart
LEESBURG, VIRGINIA
STORE NO: 1904
190 SGL-QL
JOB NUMBER: 11080-26

| ISSUE BLOCK | |
|---|---|
| 11/30/17 | OTB |

| | |
|---|---|
| CHECKED BY: | DPK |
| DRAWN BY: | JOS |
| FILE NAME: | P2 |
| PROTO CYCLE: | 04/28/17 |
| DOCUMENT DATE: | 09/13/17 |

BID SET
NOT FOR
CONSTRUCTION

ENLARGED PLUMBING PLANS AND RISERS

SHEET: P2

Order Plans @ www.LDILine.com