NVue - 11/2/2017 10:50:06 AM

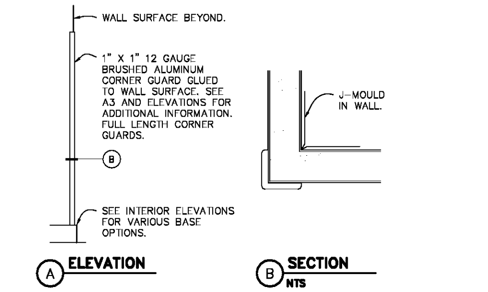

4/A7 ALUMINUM CORNER GUARD
SCALE 3/4" = 1'-0"

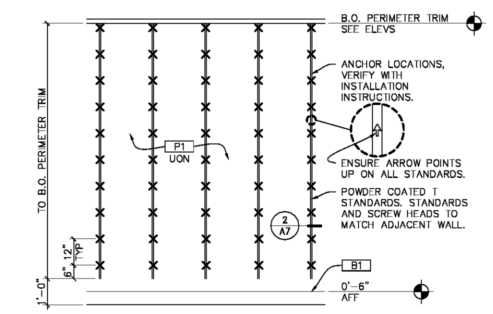

1/A7 ELEVATION AT SALES STANDARDS
SCALE 3/8" = 1'-0"

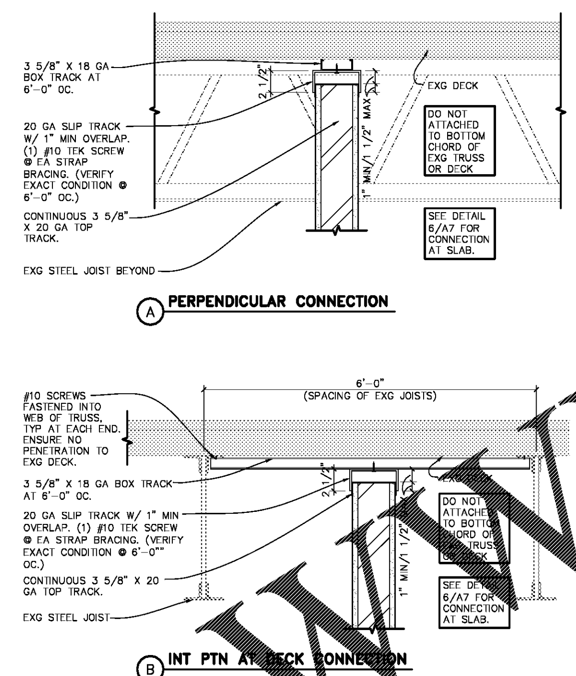

5/A7 CONNECTION
SCALE 1 1/2" = 1'-0"

NOTE:
STANDARDS BY TORRID ARE 12'-0"H, STACKED VERTICALLY AS ALLOWED, "REEVE" #44 HD SURFACE MTD STDS. ATTACH TO WOOD STRIPS WITH 1-1/2" LONG FLAT HEAD SCREWS THRU ALL PROVIDED HOLES @ 24" OC WITH "REEVE" #81-R/L-14 WOOD SHELF BRACKETS (BY TORRID). (TYP IN STOCKROOM ONLY)

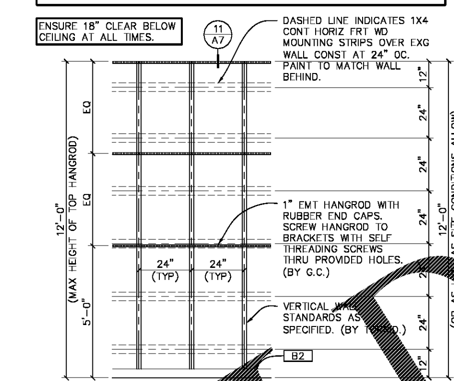

8/A7 ELEVATION AT HANGROD
SCALE 3/8" = 1'-0"

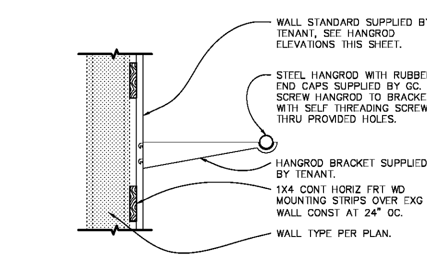

11/A7 SECTION AT HANGROD
SCALE 1 1/2" = 1'-0"

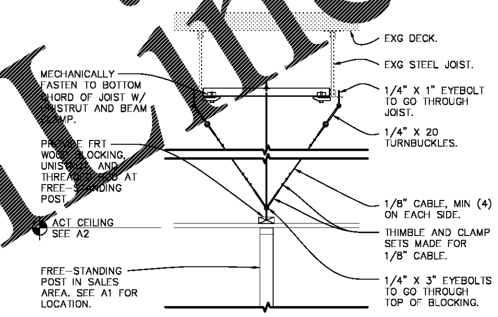

12/A7 BLOCKING AT FREE-STANDING POST
SCALE 3/4" = 1'-0"

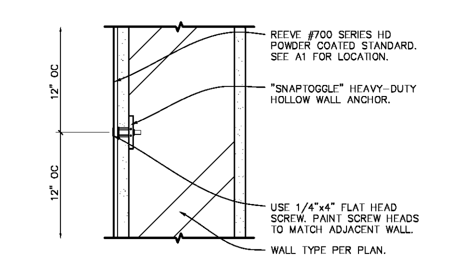

2/A7 TOGGLE BOLT AT SALES STANDARD
SCALE 3" = 1'-0"

USE DETAIL WHEN THERE'S A NEW GYP BD SOFFIT AT THE STOREFRONT

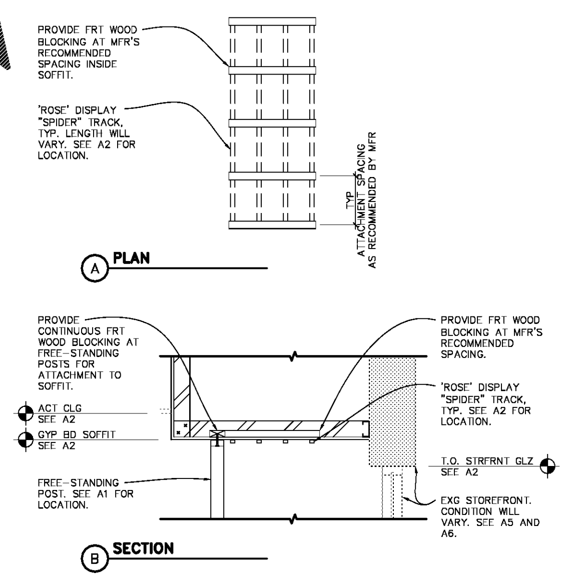

9/A7 BLOCKING AT STOREFRONT
SCALE 3/4" = 1'-0"

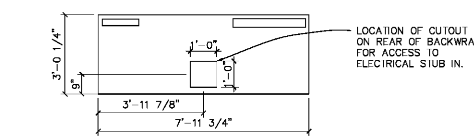

13/A7 ELEVATION AT BACKWRAP (REAR)
SCALE 3/8" = 1'-0"

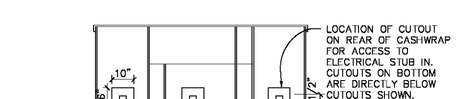

14/A7 ELEVATION AT CASHWRAP (REAR)
SCALE 3/8" = 1'-0"

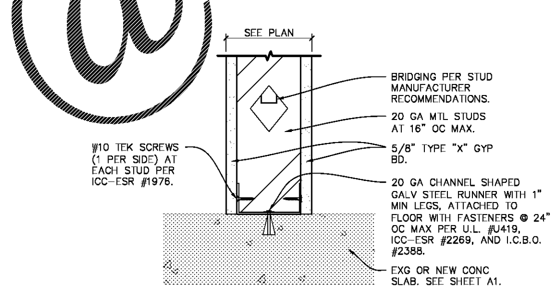

6/A7 WALL CONNECTION AT SLAB
SCALE 3" = 1'-0"

NOTE:
USE AUXILIARY SPRING PROVIDED WITH DOOR. SPRING MUST BE SECURELY ATTACHED TO ANGLE BRACKET ON DOOR AND TO FRAMING ABOVE DOOR HINGE. SPRING MUST BE INSTALLED SO THAT DOOR IS SELF CLOSING.

NOTE:
WRAPPING OF STUD NOT REQUIRED IN 1 HOUR CEILING APPLICATION.

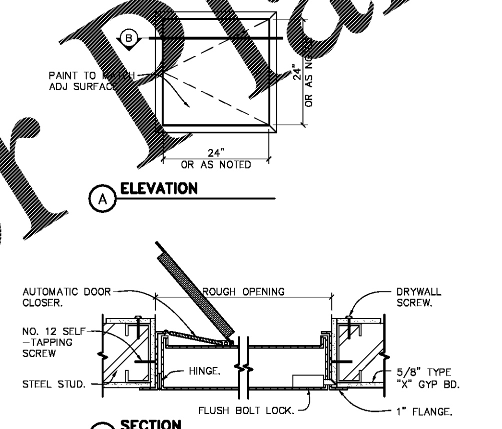

3/A7 ACCESS PANEL
SCALE 3/4" = 1'-0"

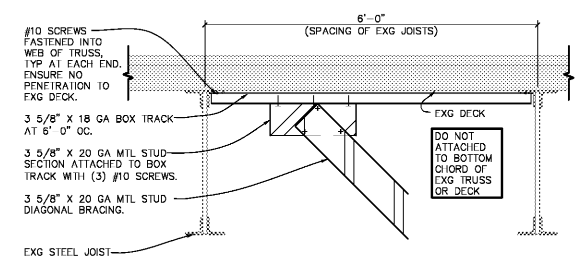

7/A7 DIAGONAL BRACING CONNECTION
SCALE 1 1/2" = 1'-0"

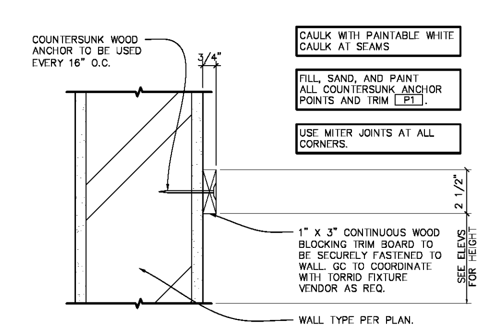

10/A7 PERIMETER TRIM
SCALE 3" = 1'-0"

NOTE:
STANDARDS BY TORRID ARE 12'-0"H, STACKED VERTICALLY AS ALLOWED, "REEVE" #44 HD SURFACE MTD STDS. ATTACH TO WOOD STRIPS WITH 1-1/2" LONG FLAT HEAD SCREWS THRU ALL PROVIDED HOLES @ 24" OC WITH "REEVE" #81-R/L-14 WOOD SHELF BRACKETS (BY TORRID). (TYP IN STOCKROOM ONLY)

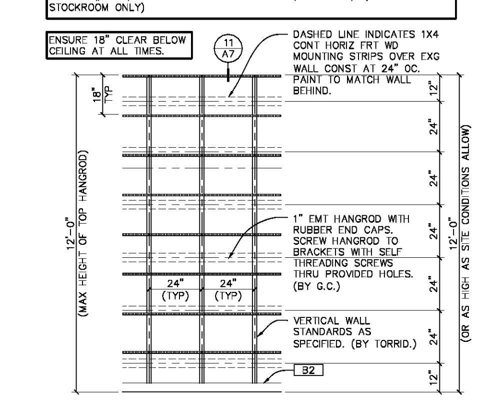

15/A7 ELEVATION AT HANGER MANAGEMENT
SCALE 3/8" = 1'-0"

CMA
architecture · planning · interior design
C.M. ARCHITECTURE, P.A.,
A PROFESSIONAL ARCHITECTURAL CORPORATION.
800 WASHINGTON AVE N., SUITE 208
MINNEAPOLIS, MN 55401-1148
PHONE: (612) 547-1300
FAX: (612) 547-1301
CONTACT: KELLY GIVENS
torrid@cmarch.com

5677

CONSULTANTS:

MEP ENGINEER:
AEDIFICA CASE
796 MERUS COURT
ST. LOUIS, MO 63026
PH: (636) 349-1600

SEAL:

PATRICK G. BLEES, ARCHITECT

SIGNATURE
11.2.17
DATE ISSUED
6140
REG. NO.

TORRID

ACADIANA MALL
5725 JOHNSTON STREET
LAFAYETTE, LA
70503
SPACE #B-115
NEW MALL A

SHEET TITLE:
MISCELLANEOUS DETAILS

REVISIONS:

NO:	DATE:	BY:

PROJECT NO: 17127.044
DRAWN BY: NV

A7

COPYRIGHT C.M. ARCHITECTURE, P.A. 2017

Order Plans @ WWW.LDILine.com

Q:\TORRID\17127.044 Acadiana Mall #5677 Lafayette, LA - NEW MALL A\Drawings\Work In Progress\17127.044 A7 DETL.dwg