Division 22 - PLUMBING SPECIFICATION
SECTION 22 05 00.00 - COMMON WORK RESULTS FOR PLUMBING
GENERAL
The general conditions, supplementary conditions and instructions to bidders shall apply to and be part of this specification.
Contractor shall comply with all applicable codes, rules and regulations.
Contractor shall obtain and pay for all permits, certificates of inspection and approvals required.
The base bid shall include furnishing all materials, labor, tools, equipment and installation of all work required to provide complete plumbing systems as outlined in Division-22.
Examine the drawings, specifications, and visit the site prior to submitting a bid.
APPLICABLE STANDARDS
The applicable provisions of the following standards shall govern:
American Society for Test Materials (ASTM);
American Standards Association (ASA);
Underwriters Laboratories (UL);
National Fire Protection Association (NFPA);
Florida Building Code.
Florida Plumbing Code.
The installation of all plumbing work shall conform to the applicable local plumbing codes and statutes.
PLANS
Plans are diagrammatic indicating required size, points of termination of piping and suggested routes. However, it is not intended that drawings indicate all necessary offsets. Install piping in such manner as to conform to the structure, avoid obstructions and preserve headroom. All piping shall be run as straight as possible and symmetrical with architectural items. Piping shall be concealed in pipe shafts, pipe spaces, and furring wherever possible. Piping fabricated before coordination with the other trades will be done at contractors' own risk.
In the event of inconsistencies or conflict within or between the Contract Documents, provide the better quality, more costly or greater quantity of work and comply with the more stringent requirements. Seek the direction of the Engineer of Record for clarification of conflicts as soon as a conflict is identified. (Prior to installation)
CUTTING, PATCHING AND DEMOLITION
Contractor shall include all necessary cutting and patching required to perform their work.
Care shall be taken when working in existing spaces so as not to damage existing walls and ceilings where work is being performed.
Provide non-destructive concrete structural scanning or concrete x-ray prior to drilling, cutting or coring.
Core drill all slab penetrations.
Seal around all wall, floor and ceiling pipe penetrations with NFPA approved sealant material to maintain the fire resistant and watertight integrity of the assembly.
Disconnect, demolish, and remove from site all plumbing systems, equipment, and components indicated to be removed and as necessary to perform the described scope of work. No unused plumbing systems, equipment, and components shall be abandoned.
No means of demolition shall be used that would result in damage to structures, materials, equipment or components indicated to remain or endanger the health, safety and welfare of the general public.
EXCAVATION AND BACKFILL
Perform all excavation and backfilling required for this work.
Contractor shall consult with utility company prior to beginning excavation.
At a minimum, all piping shall be laid on a bed of sand, 6" deep, well tamped into place and properly graded to permit the pipe to have an even bearing throughout its entire length. Sand shall be installed around the piping and to a point 6" above the piping.
PIPE JOINTS AND CONNECTIONS
Any minor adjustment in location of alignment of new work or connection to existing utilities shall be performed as directed by the engineer without additional cost to the owner.
The contractor shall be responsible for damages to the grounds, walks, road, building, piping systems, electrical systems, and their equipment and contents, caused by leaks in the piping systems being installed or having been installed by him. The contractor shall repair at his expense all damaged so caused. All repair work shall be done as directed by and in such manner as satisfactory to the architect.
Owner reserves the right to make emergency repairs as required to keep equipment in operation without voiding the contractor's guarantee bond nor relieving the contractor of his responsibilities during the bonding period.
project conditions
Where new plumbing systems are required to be connected to existing plumbing systems, it is the contractor's responsibility to verify the location, size, invert elevation, pressure, condition, and they shall verify that the existing plumbing system is indeed the correct and appropriate plumbing system before any work is done. Provide all necessary camera scoping and dye testing as necessary. If there is any need for concern, if it is determined that the existing plumbing system is not a correct or appropriate plumbing system or not connected to a correct or appropriate plumbing system, if the condition of the existing plumbing system is not viable for re-use, or any other condition that would not allow the proper functioning of the new plumbing system, the contractor shall notify the engineer in writing immediately via RFI and wait for direction before proceeding.
Interruption of Existing Plumbing Services: Do not interrupt service to facilities occupied by Owner or others unless permitted under the following conditions and then only after arranging to provide temporary service according to requirements indicated:
Notify, Architect, Construction Manager, and Owner no fewer than seven days in advance of proposed interruption of service.
Do not proceed with interruption of service without Architect's written permission.
WARRANTY
This contractor shall warrant that all work under this section shall be free of defective work, materials and parts for a period of one year after acceptance of the work and shall repair, revise, and replace, at no cost to the owner, any such defects occurring within the warranty period.
22 05 03.00 - SUBMITTALS FOR PLUMBING
General
Where submittals are required by the Contract Documents, they shall be prepared and supplied in accordance with the Contract Documents. In addition to Division 01, the Contractor is advised to review and comply with the requirements articulated within each Division and within each section of that Division.
Some Divisions may include a division-specific "Submittal Requirements for ...." section. Where this section exists, it articulates additional requirements for submittals that apply to the work of that Division.
The following requirements help to identify, track and keep the project organized for all parties involved. They are necessary to ensure a timely turnaround and an appropriate technical review. Submittals that do not conform to the administrative requirements are rejected and returned, without technical review.
Requirements
Supply submittals for each section; Submittals shall be supplied on a section-by-section and type-by-type basis. For example, independent product data submittals shall be furnished for each section that requires product data submittals. Independent shop drawing submittals shall be furnished for each section that requires shop drawings. Refer to the specifications for identification of which submittals are required for the project. Separate PDF file packages shall be supplied for each section, for each submittal type, where electronic submittals are required. Each PDF shall represent a single standalone submittal.
Separately bound and identified submittals shall be provided where hardcopies are required.
Include a transmittal: Transmittals shall enumerate each submittal for each section of each type and iteration.
Include cover sheet / title page: The cover sheet shall include the information identified in the contract documents. It shall be included as the first page of each electronic and/or hardcopy document-based submittal. An editable and printable PDF form created with editable fields and specification compliant appearance is available from KLH upon request. It is also downloadable from the KLH website at www.klhengrs.com.
Include an index: The index shall enumerate the contents of the submittal.
Include checklists: Where checklists are included with the specifications, complete and include them within the appropriate submittal. Supply complete submittals: Complete submittals of each type are required. Partial submittals will be rejected. Where a section requires a product data submittal, all product data for that section shall be supplied together, at one time, as one complete submittal. Do not send half the product data as one submittal and the other half as a separate one. When resubmittal is required (e.g. Revise and Resubmit) the revised submittal shall be more complete, more accurate and more contract-compliant than its rejected predecessor.
The submittal number (for each section and type) shall increment for each subsequent submittal (00 – Original submission, 01 – First Resubmission, 02 – Second Resubmission, etc…). Resubmittals shall include a copy of the reviewers comments supplied with the prior submittal rejection and shall be amended with a description of the specific action taken to comply with the reviewer's comments. The absence of this on resubmittal is cause for rejection.
Name electronic files to match the submittal ID and cover sheet: The electronic file name of submittals shall match the submittal ID included on the submittals cover page. For example: The original/first product data submittal for Section 220523 would be labeled as "220523.00-PD-00"; the first resubmittal of same shall be labeled "220523.00-PD-01". The original/first shop drawings submittal file for the same section would be labeled "220523.00-SD-00"; the first resubmittal of same shall be labeled "220523.00-SD-01".
Use of Electronic Drawings from the Owner's Design Team
Plan drawings for the Project were created with Revit. Revit electronic files are not available. If expressly permitted by the Owner and the terms of the Contract, editable electronic versions of published two-dimensional plan drawings may be made available for the creation of shop and as-built drawings for a nominal surcharge by sheet series for projects that were designed in Revit and must be converted to an AutoCAD or Navisworks format.
Due to the proprietary nature of internal design systems, editable native-software versions of some drawings, including but not limited to system diagrams and details will not be made available in an editable form. In these cases, electronic versions of the drawings may be made available only in PDF, JPG or similar non-editable electronic form, at the sole discretion of the Design Professional.
The Request Drawings form can be accessed, filled out and submitted at the following internet address (scroll down to bottom of home page): http://www.klhengrs.com.
22 05 23.00 - GENERAL DUTY VALVES
General
Provide stops or isolation valves on domestic water supplies to isolate hot and cold water to each fixture, including all equipment and equipment provided by others.
Fixtures, item or units furnished by the manufacturer with integral stops or stops specified with the fixture are considered to be properly valved at the fixtures.
Access shall be provided to all valves.
Valves on domestic water piping shall be ball valves.
Ball valves - 2 inch and smaller: Lead-Free, 2-piece body, 600 psi CWP, 100 psi at 300°F, cast bronze body, full port, Teflon seats, blowout-proof stem, adjustable packing gland, chrome plated bronze ball, and vinyl-covered steel handle. Provide solder ends. Provide extended valve stems for valves used on insulated lines. Provide equal to Nibco series 585-80-LF.
Manufacturers: Subject to compliance with requirements, available products that may be incorporated into the work include, and are limited to, the following:
American Valve, Inc.
Conbraco Industries, Inc.; Apollo Valves.
Crane Co.; Crane Valve Group; Crane Valves.
Hammond Valve.
Milwaukee Valve Company.
NIBCO INC.
Red-White Valve Corporation.
Watts Regulator Co.; a division of Watts Water Technologies, Inc

22 05 29.00 – HANGERS AND SUPPORTS FOR PLUMBING PIPING AND EQUIPMENT
GENERAL
Support all piping and equipment by hangers or brackets.
Provide structural steel members where required to support piping and equipment. No portion of piping or valves shall be supported by equipment.

DELEGATED DESIGN
For equipment supports, this contractor shall retain a qualified professional engineer to provide support calculations of static and dynamic loading due to operating equipment weight, seismic and wind forces. The signed and sealed calculations and details shall be submitted by the retained professional engineer.
PIPING
Provide hangers, supports, clamps and attachments to support piping properly from building structure. Support from the decking above is prohibited. Arrange for grouping of parallel runs of horizontal piping supported together on field-fabricated, heavy-duty trapeze hangers where possible.
Where piping of various sizes is supported together by trapeze hangers, space hangers for smallest pipe size or provide intermediate supports for smaller diameter pipe as specified above for individual pipe hangers.
Individual pipe hangers to be Anvil International Clevis Hanger Fig. 260, Elcen, or approved equal.
Rod sizes to conform to the following: 3/8" rods for 3/4" to 2" pipe; 1/2" rods for 2-1/2" to 3" pipe; 5/8" rods for 4" to 5" pipe; 3/4" rods for 6" pipe.
Hangers shall be sized to allow insulation to pass through unobstructed, provide saddle support for insulation at all hangers.
Hanger spacing for steel piping unless otherwise noted is to be as follows: 1-1/4" or smaller to be 8' on center; 1-1/2" to 2" to be 10' on center; 2-1/2" and larger to be 12' on center and at each change of direction.
Hanger spacing for copper pipe to be as follows: 1" and smaller 6' on center; 1-1/4" or larger 8' on center.
Hanger spacing for cast iron piping shall be 5'-0" on center.
Hanger space for CPVC and PVC pipe to be as follows: 1" and smaller to be 3' on center; 1-1/4" or larger to be 4' on center.
Piping shall also be supported at each change in direction, valves and equipment.
22 05 53.00 - IDENTIFICATION FOR PLUMBING PIPING AND EQUIPMENT
PIPING
Provide self-adhesive pipe labels with white background and black lettering, contact type with permanent adhesive backing.
Include identification of piping service using same designations or abbreviations as used on the drawings and an arrow indicating flow direction.
EQUIPMENT
Provide self-adhesive plastic equipment labels with white background and black lettering, contact type with permanent adhesive backing, 160 degree F temperature. Include equipment's drawing designation and specification section number where equipment is specified.
22 07 19.00 – PLUMBING SYSTEM INSULATION
GENERAL
Insulation shall be listed and labeled per ASTM E 84 for plenum installations employing slip on techniques.
Provide insulation materials, accessories, and finishes with smooth, straight, and even surfaces; free of voids throughout the length of piping including fittings, valves, and specialties.
Surface Preparation: Clean and dry surfaces to receive insulation. Remove materials that will adversely affect insulation application.
PIPING SYSTEMS REQUIRING INSULATION
Insulate domestic cold water piping, associated fittings and valves with flexible elastomeric 1/2" wall thickness insulation.
Insulate domestic hot water piping, associated fittings and valves with 1" thick flexible elastomeric, 1-1/2" thick fiberglass insulation or per local energy code, whichever greater.
Insulate waste piping above ceilings that receive condensate with 1/2" wall thickness insulation.
Insulate exposed sanitary drains, domestic water, domestic hot water, and stops for plumbing fixtures for people with disabilities.
FLEXIBLE ELASTOMERIC INSULATION
Closed-cell, sponge- or expanded-rubber materials. Comply with ASTM C 534, Type I for tubular materials and Type II for sheet materials.
Adhesives, Sealers, and Protective Finishes: As recommended by insulation manufacturer for applications indicated.
Manufacturers: Subject to compliance with requirements, available products that may be incorporated into the work include, and are limited to, the following:
Aeroflex USA, Inc.; Aerocel.
Armacell LLC; AP Armaflex.
K-Flex USA; Insul-Lock, Insul-Tube, and K-FLEX LS.
FIBERGLASS INSULATION
Fiberglass piping insulation: ASTM C 547, Class 1
Encase pipe fittings insulation with one-piece pre-molded PVC fitting covers.
Vapor Barrier Material: Paper-backed aluminum foil, except as otherwise indicated, strength and permeability rating equivalent to adjoining pipe insulation jacketing.
Staples, Bands, Wires, and Cement: As recommended by insulation manufacturer for applications indicated.
Adhesives, Sealers, and Protective Finishes: As recommended by insulation manufacturer for applications indicated.
Manufacturers: Subject to compliance with requirements, available products that may be incorporated into the work include, and are limited to, the following:
Armstrong World Industries, Inc.
Owens-Corning Fiberglass Corp.
Keene Corp.
CertainTeed.
Johns Manville.
ADHESIVES
Materials shall be compatible with insulation materials, jackets, and substrates and for bonding insulation to itself and to surfaces to be insulated, unless otherwise indicated.
Insulation for handicap accessible fixtures
All handicap lavatory p-trap and angle stop assemblies shall be insulated with trap wrap protective kit manufactured by Proflo model PF202WH or equal. Abrasion resistant, anti-microbial vinyl exterior cover shall be smooth. For traps, the insulation shall have a cleanout nut cap to allow service to the trap without disassembly. For stops, the insulation shall have a lock lid that prevents tampering but allows access without removal of the insulation. Fasteners shall remain substantially out of sight.
Manufacturers: subject to compliance with requirements:
Proflo
Truebro
Plumberex
22 11 16.00 – DOMESTIC WATER PIPING
GENERAL
Install piping concealed from view unless noted otherwise, free of sags and bends. Do not enclose, cover, or put piping into operation until it has been inspected and approved by authorities having jurisdiction. Clean and disinfect potable domestic water piping using approved procedures by authorities having jurisdiction.
Install at right angles; diagonal runs are prohibited unless otherwise shown. Install piping above accessible ceilings to allow sufficient space for ceiling panel removal. Coordinate all piping with all other trades.
Provide water pressure regulators where necessary to limit the incoming water pressure to 80 psi inside the building.
DOMESTIC WATER PIPING ABOVE GROUND:
Hard copper tube, ASTM B 88, Type L; wrought-copper, solder-joint fittings; and soldered joints.
Solder Filler Metals: ASTM B 32, lead-free alloys.
Flux: ASTM B 813, water flushable.
Type "L"; copper pressure-seal joint; and pressure-seal joint systems.
CATHODIC PROTECTION
Provide dielectric insulation at points where copper or brass pipe comes in contact with ferrous piping, reinforcing steel or other dissimilar metal in structure.
22 11 19.00 – DOMESTIC WATER PIPING SPECIALTIES
TRAP-SEAL PRIMER DEVICE
The plumbing contractor shall provide trap primers for all floor drains. Trap primer shall be equal to Mifab MR-500 trap primer valve. Provide access panel in wall or ceiling for all concealed trap primers. Install trap seal primer valves with outlet piping pitched down toward drain trap a minimum of 1% and connect to floor drain body, trap or inlet fitting.
Coordinate exact location with architect prior to installation.
Manufacturers: Subject to compliance with requirements, available manufacturers offering products that may be incorporated into the Work include, and limited to, the following:
MIFAB, Inc.
Precision Plumbing Products, Inc.
Sioux Chief Manufacturing Company, Inc.
Smith, Jay R. Mfg. Co.; Division of Smith Industries, Inc.
Watts; a division of Watts Water Technologies, Inc.; Watts Regulator Company.

WATER HAMMER ARRESTERS
Provide water-hammer arresters in water piping according to PDI-WH 201.
Standard: ASSE 1010 or PDI-WH 201.
Type: Metal bellows or copper tube with piston.
Size: ASSE 1010, sizes AA and A through F, or PDI-WH 201, sizes a through F.
Manufacturers: Subject to compliance with requirements, available manufacturers offering products that may be incorporated into the work include, and are limited to, the following:
Amtrol, Inc.
Josam Company.
Precision Plumbing Products, Inc.
Sioux Chief Manufacturing Company, Inc.
Smith, Jay R. Mfg. Co.; Division of Smith Industries, Inc.
Watts Drainage
22 13 16.00 – SANITARY, WASTE AND VENT PIPING SYSTEM
GENERAL
Provide a complete soil, waste and vent system in the building [illegible] indicated on the drawings and as specified herein.
Above ground soil, waste and vent piping within buildings including soil stacks, vent stacks, horizontal branches, traps, and connections to fixtures and drains.
Underground building drain piping including mains, branches, traps, connections to fixtures and drains, and connections to stacks, terminating at connection to existing sanitary sewer.
INTERIOR PIPING
Cast iron soil piping and fittings no hub ASTM A-74 with ASTM C-564 gasketed joints.
Waste and vent piping 2-1/2" and under - Type "M" copper ASTM B88.62.
Soil, waste and vent piping 3" and over in size and all underground cast iron soil piping and fittings, ASTM A-74.
No-hub cast iron pipe and fittings may be used above floor for soil, waste, and vent piping.
Piping alignment shall be as indicated on the drawings using approved wye branches or eight bands for direction changes and shall be surely supported or secured to maintain such alignment.

Piping alignment shall be as indicated on the drawings using approved wye branches or eighth bends for direction changes and shall be surely supported or secured to maintain such alignment.
Pitch of sanitary piping shall be uniform at a minimum of 1/8" per foot for building drains, drainage piping greater than 2" and as indicated on the drawings. Pitch of sanitary piping shall be uniform at a minimum of 1/4" per foot for drainage piping 2" and smaller and as indicated on the drawings.
Protection shall be given all footings, other structural elements during underground work adjacent to such items. Refer to architectural and/or structural drawings for locations.
Vent all fixtures, connect branch vents to main vent risers at least six inches above flood rim of fixtures. Pitch vent lines back to soil or waste pipe, free of drops and sags.
Cleanouts shall be full size of pipe up to 4", and 4" for larger sizes. For underground and concealed lines, provide cleanouts in accessible positions at each right angle turn and at intervals not to exceed fifty feet. In floors, install flush with finish floor with extension pipe from cleanout wye.
22 13 19.00 - SANITARY WASTE PIPING SPECIALTIES
CLEANOUTS
Floor cleanout equal to Zurn Z-1400 adjustable floor cleanout.

Manufacturers: Subject to compliance with requirements, available products that may be incorporated into the work include, and are limited to, the following:
Josam
Jay R Smith
Watts Regulator Co.; a division of Watts Water Technologies, Inc
Mifab
Zurn
FLOOR DRAINS
Provide floor drains in compliance with ASME A112.6.3.
Provide floor drains with trap-seal primer fitting. All floor drains located in rooms with tile floors shall be provided with manufacturer's standard square grate, unless noted otherwise.
Refer to plumbing drain schedule for project specific floor drain manufacturers and models.
Manufacturers: Subject to compliance with requirements, available products that may be incorporated into the work include, and are limited to, the following:
Jay R Smith MFG. Co.
Josam
Mifab
Watts Drainage Products Inc.
Zurn Plumbing Products Group

FLOOR SINKS
Provide floor sinks in compliance with ASME A112.6.7. All floor sinks shall have a cast iron body unless noted otherwise.
All floor sinks located in a commercial kitchen to have a half grate cover unless noted otherwise.
Refer to plumbing drain schedule for project specific floor drain manufacturers and models.
Manufacturers: Subject to compliance with requirements, available products that may be incorporated into the work include, and are limited to, the following:
Jay R Smith MFG. Co.
Josam
Mifab
Watts Drainage Products Inc.
Zurn Plumbing Products Group
22 30 01.00 - POINT OF USE THERMOSTATIC MIXING VALVES
GENERAL
Thermostatic mixing valves shall be provided for all public hand washing sinks and lavatories and shall be ASSE 1070 listed, lead free, sweat connections, 125 psi operating pressure. Mount under sink or lavatory. Set outlet temperature of thermostatic mixing valve to 105 degrees F.
Point-of use thermostatic mixing valves shall be equal to Powers LFG480. Route tempered water to hot water side of sink and lavatories.
Manufacturers: Subject to compliance with requirements, available manufacturers offering products that may be incorporated into the work include, and are limited to, the following:
Symmons
Lawler
Leonard
Powers
Bradley
22 33 00.00 - COMMERCIAL ELECTRIC, DOMESTIC WATER HEATERS
TANK TYPE
Provide commercial electric tank type water heater as scheduled. Comply with UL 1453 Standard.
Provide corrosion resistant metal drain pan with raised edge sized not less than the base of the water heater and include drain outlet not less than NPS 3/4 with ASME B1.20.1 pipe threads.
Provide field fabricated piping heat trap arrangement according to ASHRAE/IESNA 90.1.
Provide combination temperature and pressure relief valve, ASME rated and stamped with relieving capacity at least as great as heat input and pressure setting less than water heater's rated operating pressure.
Provide water heater stands or mounting brackets with manufacturer's factory fabricated steel capable of supporting water heater and water.
Provide steel pressure-rated expansion tank constructed with welded joints and factory-installed butyl rubber diaphragm, pre-charged to minimum system operating pressure at tank.
Provide field fabricated piping-type heat traps in accordance with ASHRAE/IESNA 90.1.
Manufacturers: Subject to compliance with requirements, available manufacturers offering products that may be incorporated into the work include, and are limited to, the following:
AO Smith
Bock Water Heaters
Bradford White Corporation.
Lochinvar Corporation.
State Industries.
22 40 00.00 - PLUMBING FIXTURES
GENERAL
Refer to plumbing fixture schedule.
Manufacturers: Subject to compliance with requirements, available manufacturers offering products that may be incorporated into the work include, and are limited to, the following:
American Standard America.
Crane Plumbing, LLC.
Kohler Co.
Toto USA, Inc.
Zurn Industries, LLC; Commercial Brass and Fixtures.
Sterling; a Kohler Company.
Eljer Inc.

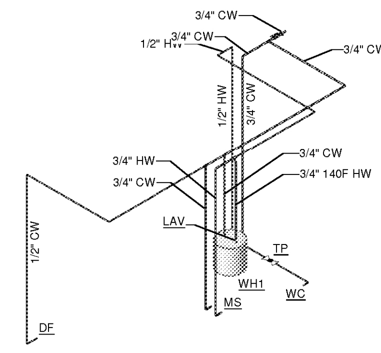

3 SUPPLY ISO

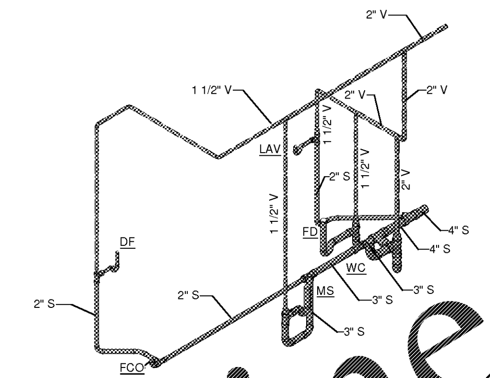

4 SANITARY ISO

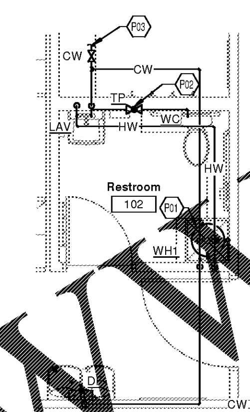

2 PLUMBING SUPPLY PLAN
1/4" = 1'-0"

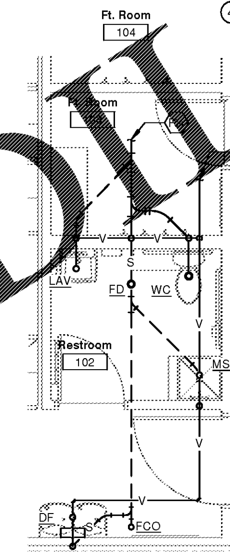

1 PLUMBING SANITARY PLAN
1/4" = 1'-0"

FIELD VERIFY ALL CONDITIONS

DESIGN DRAWINGS ARE SCHEMATIC. THIS CONTRACTOR SHALL VISIT THE SITE PRIOR TO BIDDING OR AWARD OF CONTRACT TO INSPECT EXISTING FIELD CONDITIONS. THIS CONTRACT SHALL INCLUDE ALL LABOR AND MATERIALS NECESSARY FOR FIELD MODIFICATIONS DUE TO EXISTING CONDITIONS.

THE CONTRACTOR SHALL CONTACT THE ARCHITECT, ENGINEER OR OWNER PRIOR TO BIDDING FOR INTERPRETATIONS AND CLARIFICATIONS OF THE DESIGN AND INCLUDE IN HIS BID ALL COSTS TO MEET THE DESIGN INTENT. CLARIFICATIONS MADE BY THE ARCHITECT, ENGINEER OR OWNER AFTER BIDDING WILL BE FINAL AND SHALL BE IMPLEMENTED AT CONTRACTORS COST.

BIDDING CONTRACTORS SHALL HAVE A WORKING KNOWLEDGE OF LOCAL CODES AND ORDINANCES AND SHALL INCLUDE IN THEIR BIDS THE COSTS FOR ALL WORK INSTALLED IN STRICT ACCORDANCE WITH GOVERNING CODES, THE PLANS AND SPECIFICATIONS NOT WITHSTANDING. THE CONTRACTOR SHALL ALERT ARCHITECT, ENGINEER OR OWNER OF ANY APPARENT DISCREPANCIES BETWEEN GOVERNING CODES AND DESIGN INTENT.

KEYED NOTES

P01 INSTALL NEW WATER HEATER ABOVE MOP SINK. SEE DETAIL FOR ADDITIONAL INFORMATION. VERIFY IN FIELD EXACT LOCATION, COORDINATE WITH GENERAL AND ELECTRICAL CONTRACTOR.
P02 PROVIDE TRAP PRIMER FOR FLOOR DRAIN. REFER TO SPECIFICATIONS FOR MODEL AND MANUFACTURER. INSTALL TRAP PRIMER VALVE ASSEMBLY IN WALL AT AN ACCESSIBLE HEIGHT. PROVIDE ACCESS PANEL AS REQUIRED.
P03 CONNECT COLD WATER TAP TO EXISTING MAIN. VERIFY CONNECTION LOCATION PRIOR TO BID. GC TO COORDINATE ALL FLOOR CUTS AND CONNECTION TO LANDLORD WATER WITH MALL OPERATION.
P04 CONTRACTOR TO ROUTE NEW SANITARY TO EXISTING LANDLORD PROVIDED SANITARY STUB. GC TO COORDINATE ALL FLOOR CUTS AND CONNECTION TO LANDLORD SANITARY WITH MALL OPERATION. CONTRACTOR TO VERIFY LOCATION, INVERT, AND DEPTH PRIOR TO BID. CONTACT ENGINEER WITH ANY DEVIATIONS FROM PLANS.
P05 CONNECT NEW VENT TO EXISTING LANDLORD PROVIDED VENT. COORDINATE SIZE AND LOCATION PRIOR TO BID.

PLUMBING MISCELLANEOUS EQUIPMENT SCHEDULE

EQUIPMENT MARK	DESCRIPTION	LOCATION	MANUFACTURER	MODEL	FLA (amps)	MCA (amps)	OCP (amps)	ACCESSORIES
DF	MISCELLANEOUS PLUMBING EQUIPMENT	STOCKROOM	ELKAY	VRCGRNTL8WSK				

PLUMBING DRAIN SCHEDULE

MARK	DESCRIPTION	MANUFACTURER	MODEL	MATERIAL/ FINISH	CONNECTIONS (BY PLUMBING CONTRACTOR) TRAP PRIMER	TRAP SIZE (in)	SAN SIZE (in)	VENT SIZE (in)	ACCESSORIES/ REMARKS
FD	FLOOR DRAIN	J.R. SMITH	2010		YES	3	3	1-1/2	

PLUMBING ELECTRIC DOMESTIC WATER HEATER SCHEDULE

MARK	DESCRIPTION	MANUFACTURER	MODEL	VOLTS	PHASE	EWT (Deg F)	LWT (Deg F)	STORAGE (GAL)	FUEL	HTG KW (kW)	ACCESS
WH1	ELECTRIC DOMESTIC WATER HEATER	A.O. SMITH	DEL-6	208	1	40	140	6	ELECTRIC	2.5	

PLUMBING WATER HEATER SCHEDULE

MARK	DESCRIPTION	MANUFACTURER	MODEL	VOLTS	PHASE	EWT (Deg F)	LWT (Deg F)	STORAGE (GAL)	FUEL	HTG KW (kW)	ACCESS
WH1	ELECTRIC DOMESTIC WATER HEATER	A.O. SMITH	DEL-6	208	1	40	140	6	ELECTRIC	2.5	

PLUMBING FIXTURE SCHEDULE

MARK	DESCRIPTION	MANUFACTURER	MODEL	VALVE/FAUCET MFGR	VALVE/FAUCET MODEL	CW SIZE (in)	HW SIZE (in)	SAN SIZE (in)	VENT SIZE (in)	TRAP SIZE (in)	INT TRAP	ACCESSORIES
LAV	LAVATORY	ZURN	Z5344	ZURN	Z86500-XL	1/2	1/2	2	1-1/2	2	NO	MOUNT AT ADA HEIGHT. PROVDE ZURN Z8743-PC GRID DRAIN WITH TAILPIECE, ZURN Z102IWL-PC TRAP PRIMER WITH TRAP ARM AND ZURN Z8946-INT ADA PROTECTOR COMBINATION KIT. PROVIDE SYMMONS 7-225-CK-F THERMOSTATIC MIXING VALVE. PROVIDE AERATOR TO REDUCE GPM TO 0.35
MS	MOP SINK	FIAT	MSB-2424	FIAT	830-AA	1/2	1/2	3	1-1/2	3	NO	HOSE/HOSE BRACKET
WC	TANK WATER CLOSET	ZURN	Z5561			1/2	---	4	2	---	YES	PROVIDE ZURN Z5955SS-EL-STS OPEN FRONT SEAT AND ZURN Z5972-COMB TOILET KIT. PROVIDE CAULKING AROUND BASE.

PLUMBING ELECTRICAL COORDINATON SCHEDULE

ABBREVIATIONS
DC LOCAL DISCONNECT
MC MOTOR CONTROL (POWER)
SD DUCT SMOKE DETECTOR
CN CONTROLS
TS TOGGLE SWITCH
C/B H.A.C.R. CIRCUIT BREAKER AT SOURCE PANELBOARD
FUSE FUSE AT LOCAL DISCONNECT (VERIFY FIELD RATING)
FLA OPERATING FULL LOAD AMPS
MCA MINIMUM CIRCUIT AMPACITY
CP CORD AND PLUG CONNECTION

CONTRACTOR TYPE
EC ELECTRICAL CONTRACTOR
EX EXISTING
FC FIRE PROTECTION CONTRACTOR
GC GENERAL CONTRACTOR
HC HVAC CONTRACTOR
MFR MANUFACTURER
PC PLUMBING CONTRACTOR
OR OWNER OR OTHERS

MOTOR CONTROL TYPE
CS COMBINATION STARTER
MCC MOTOR CONTROL STARTER
MG MAGNETIC STARTER OR CONTACT
MS MANUAL STARTER
VFD VARIABLE FREQUENCY DRIVE
MSR MANUAL STARTER W/ CONTROL RELAY
OV OVERCURRENT PROTECTION

CONTROL TYPE
TC TIMECLOCK
CPT CONTROL POWER TRANSFORMER
BAS BUILDING AUTOMATION SYSTEM
LOW LOW VOLTAGE CONTROLS
LINE LINE VOLTAGE CONTROLS
RLINE REVERSE ACTING LINE VOLTAGE THERMOSTAT
MAN MANUAL
FA FIRE ALARM
CO CARBON MONOXIDE SENSOR
INT INTEGRAL TO EQUIPMENT

EQUIPMENT MARK	DESCRIPTION	VOLTS (V)	PHASE	EMERGENCY	BHP (HP)	HP (HP)	HTG KW (kW)	WATTS (W)	FLA (A)	MCA (A)	OCP (A)	DC TYPE	DC FURN	DC INST	DC WIRE	MC FURN	MC INST	MC TYPE	MC WIRE	CN FURN	CN INST	CN TYPE	CN WIRE
WH1	ELECTRIC DOMESTIC WATER HEATER	208	1				2.5						EC	EC	EC	---	---	---	---	MFR	MFR	INT	MFR

KLH ENGINEERS
MECHANICAL/ELECTRICAL ENGINEERS
WWW.KLHENGRS.COM
1538 ALEXANDRIA PIKE, SUITE 11 FT. THOMAS, KENTUCKY 41075 800-354-9783
859-442-8050
859-442-8050 FAX
LEXINGTON, KENTUCKY
COLUMBUS, OHIO
NEW YORK, NEW YORK

RGLA
rgla solutions, inc.
5100 River Road, Ste 125
Schiller Park, IL 60176
p: 847.671.7452
f: 847.671.4200
www.rgla.com

REVISIONS:	DATE:
ISSUE FOR BID, CLIENT, LANDLORD AND PERMIT	10/27/2017

robert g. lyon + associates, inc.
retail architecture
5100 River Road, Ste 125
Schiller Park, IL 60176
p: 847.671.7452
f: 847.671.4200
www.rgla.com

THE ABOVE DRAWINGS AND SPECIFICATIONS AND IDEAS, DESIGNS AND ARRANGEMENTS REPRESENTED THEREBY ARE AND SHALL REMAIN THE PROPERTY OF THIS OFFICE: AND NO PART THEREOF SHALL BE COPIED, DISCLOSED TO OTHERS OR USED IN THE CONNECTION WITH ANY WORK OR PROJECT OTHER THAN THE SPECIFIC PROJECT FOR WHICH THEY HAVE BEEN PREPARED AND DEVELOPED WITHOUT THE WRITTEN CONSENT OF THIS OFFICE. VISUAL CONTACT WITH THESE DRAWINGS OR SPECIFICATIONS SHALL CONSTITUTE CONCLUSIVE EVIDENCE OF ACCEPTANCE OF THESE RESTRICTIONS.

WRITTEN DIMENSIONS ON THESE DRAWINGS SHALL HAVE PRECEDENCE OVER SCALED DIMENSIONS: CONTRACTORS SHALL VERIFY AND BE RESPONSIBLE FOR ALL DIMENSIONS AND CONDITIONS ON THE JOB AND THIS OFFICE MUST BE NOTIFIED OF ANY VARIATIONS FROM THE DIMENSIONS AND CONDITIONS SHOWN BY THESE DRAWINGS. SHOP DETAILS MUST BE SUBMITTED TO THIS OFFICE FOR APPROVAL BEFORE PROCEEDING WITH FABRICATION.

© 2017 RGLA SOLUTIONS, INC.
© 2017 ROBERT G. LYON & ASSOCIATES, INC.

THE NORTH FACE

AVENTURA MALL
19501 BISCAYNE BLVD
SPACE #327
AVENTURA, FL 33180

PLUMBING PLAN

DRAWN BY
BJC
CHECKED BY
KCN
JOB NUMBER
19811
SHEET NAME
P1.1

OWNERSHIP OF INSTRUMENTS OF SERVICE
All reports, plans, specifications, computer files, field data, notes and other documents and instruments prepared by the Consultant as instruments of service shall remain the property of the Consultant. The Consultant shall retain all common law, statutory and other reserved rights, including, without limitation, the copyright thereto.

Order Plans @ www.LDILine.com