2009 ANSI A117.1 ACCESSIBILITY GUIDELINES

DOORWAY APPROACHES

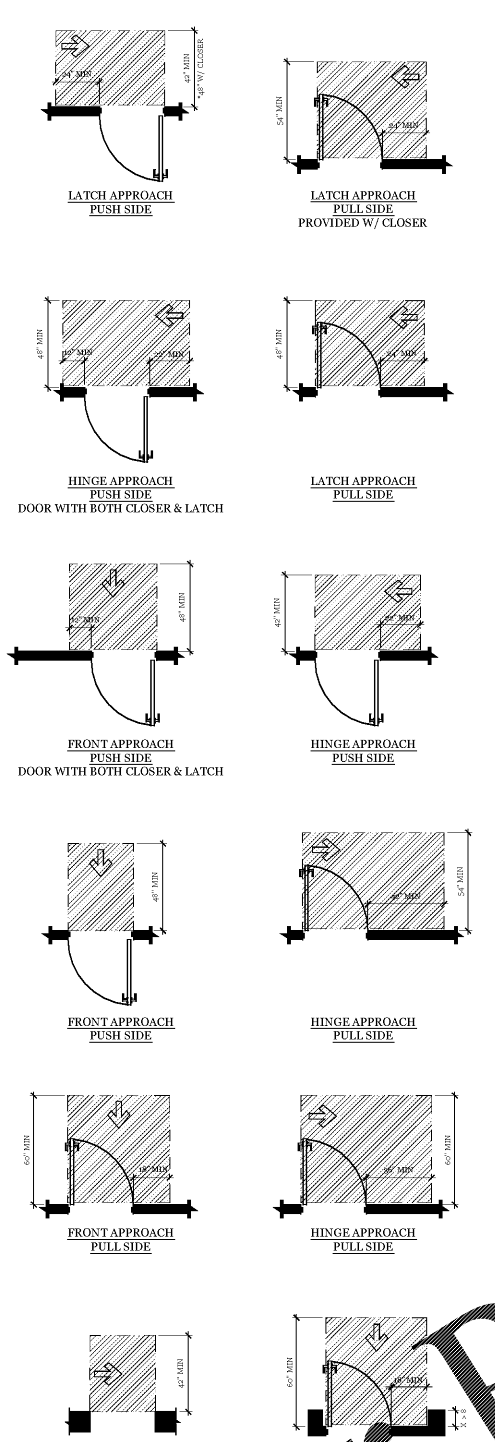

LATCH APPROACH PUSH SIDE

LATCH APPROACH PULL SIDE PROVIDED W/ CLOSER

HINGE APPROACH PUSH SIDE DOOR WITH BOTH CLOSER & LATCH

LATCH APPROACH PULL SIDE

FRONT APPROACH PUSH SIDE DOOR WITH BOTH CLOSER & LATCH

HINGE APPROACH PUSH SIDE

FRONT APPROACH PUSH SIDE

HINGE APPROACH PULL SIDE

FRONT APPROACH PULL SIDE

HINGE APPROACH PULL SIDE

DOORWAY SIDE APPROACH

RECESSED DOORS PULL SIDE

RECESSED DOORS PUSH SIDE

RECESSED DOORS PUSH SIDE W/ CLOSER

TUBS

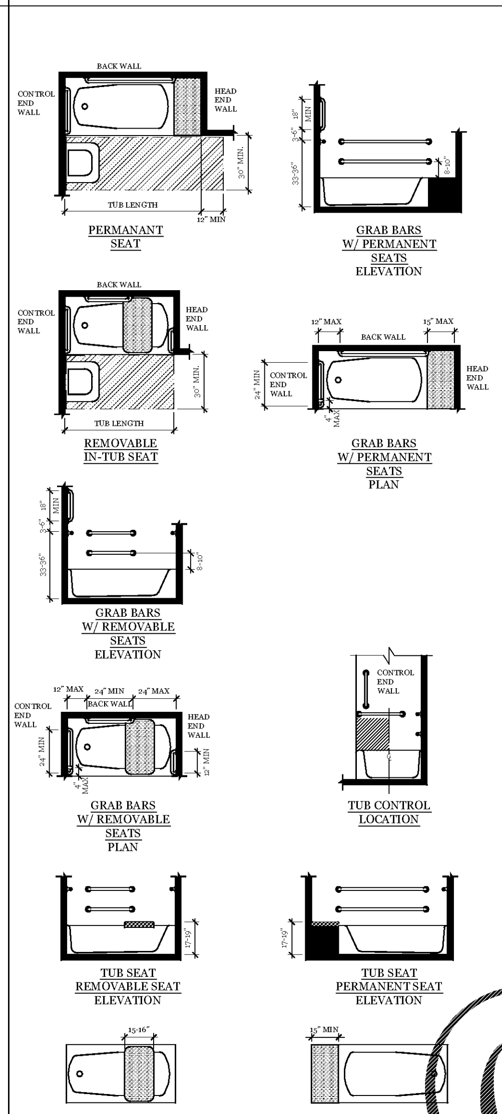

PERMANANT SEAT

GRAB BARS W/ PERMANENT SEATS ELEVATION

REMOVABLE IN-TUB SEAT

GRAB BARS W/ PERMANENT SEATS PLAN

GRAB BARS W/ REMOVABLE SEATS ELEVATION

GRAB BARS W/ REMOVABLE SEATS PLAN

TUB CONTROL LOCATION

TUB SEAT REMOVABLE SEAT ELEVATION

TUB SEAT PERMANENT SEAT ELEVATION

TUB SEAT REMOVABLE SEAT PLAN

TUB SEAT PERMANENT SEAT PLAN

SHOWERS

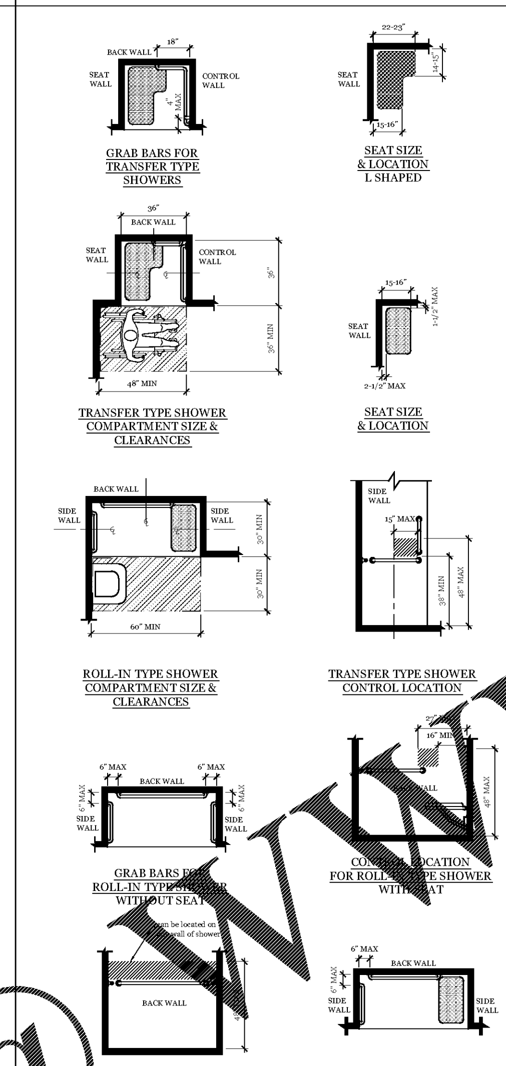

GRAB BARS FOR TRANSFER TYPE SHOWERS

SEAT SIZE & LOCATION L SHAPED

TRANSFER TYPE SHOWER COMPARTMENT SIZE & CLEARANCES

SEAT SIZE & LOCATION

ROLL-IN TYPE SHOWER COMPARTMENT SIZE & CLEARANCES

TRANSFER TYPE SHOWER CONTROL LOCATION

GRAB BARS FOR ROLL-IN TYPE SHOWER WITHOUT SEAT

CONTROL LOCATION FOR ROLL-IN TYPE SHOWER WITH SEAT

CONTROL LOCATION FOR ROLL-IN TYPE SHOWER WITHOUT SEAT

GRAB BARS FOR ROLL-IN TYPE SHOWER WITH SEAT

TOILETS (CONTINUED)

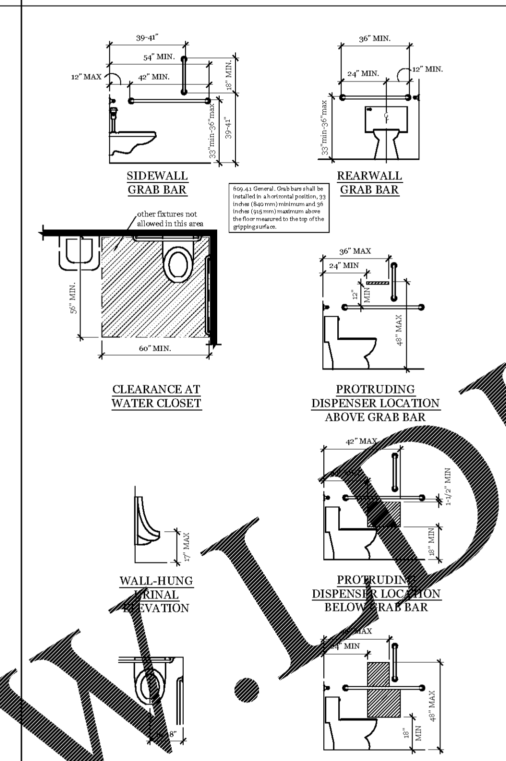

SIDEWALL GRAB BAR

REARWALL GRAB BAR

609.4.1 General. Grab bars shall be installed in a horizontal position, 33 inches (840 mm) minimum and 36 inches (915 mm) maximum above the floor measured to the top of the gripping surface.

CLEARANCE AT WATER CLOSET

PROTRUDING DISPENSER LOCATION ABOVE GRAB BAR

WALL-HUNG URINAL ELEVATION

PROTRUDING DISPENSER LOCATION BELOW GRAB BAR

ACCESSIBLE TOILET LOCATION

RECESSED DISPENSER LOCATION

DRINKING FOUNTAINS

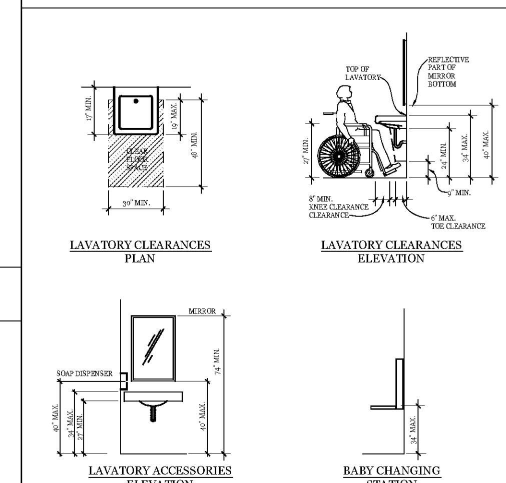

LAVATORY CLEARANCES PLAN

LAVATORY CLEARANCES ELEVATION

LAVATORY ACCESSORIES ELEVATION

BABY CHANGING STATION ELEVATION

DRINKING FOUNTAINS

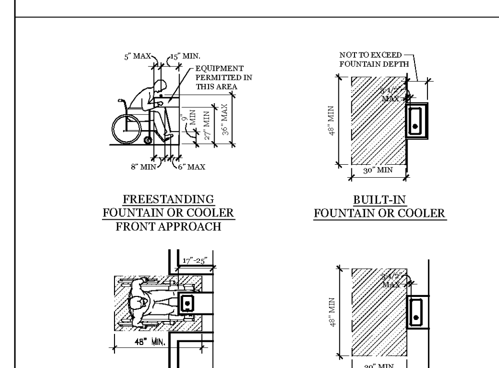

FREESTANDING FOUNTAIN OR COOLER FRONT APPROACH

BUILT-IN FOUNTAIN OR COOLER

FREESTANDING FOUNTAIN OR COOLER FRONT APPROACH

FREESTANDING FOUNTAIN OR COOLER SIDE APPROACH

TOILETS (CONTINUED)

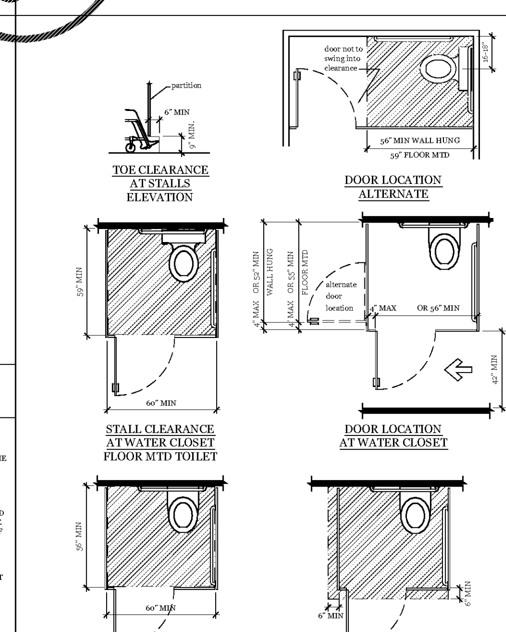

TOE CLEARANCE AT STALLS ELEVATION

DOOR LOCATION ALTERNATE

STALL CLEARANCE AT WATER CLOSET FLOOR MTD TOILET

DOOR LOCATION AT WATER CLOSET

STALL CLEARANCE AT WATER CLOSET WALL HUNG TOILET

TOE CLEARANCE AT STALLS PLAN

DOORS IN A SERIES

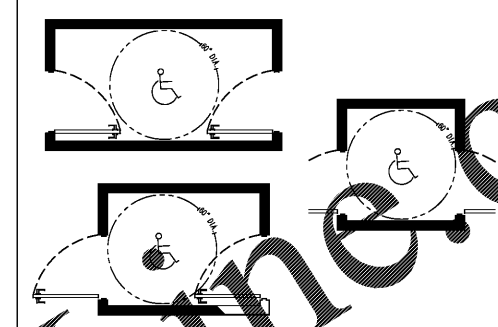

VERTICAL CLEARANCE

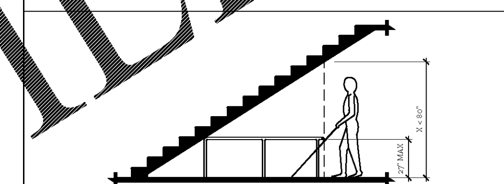

PROTRUDING OBJECTS

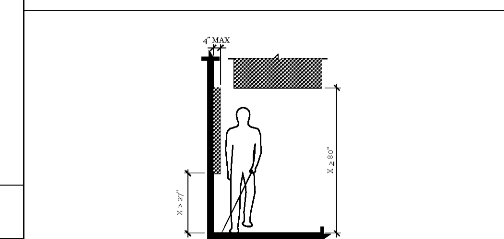

LIMITS OF PROTRUDING OBJECTS

REACH RANGES

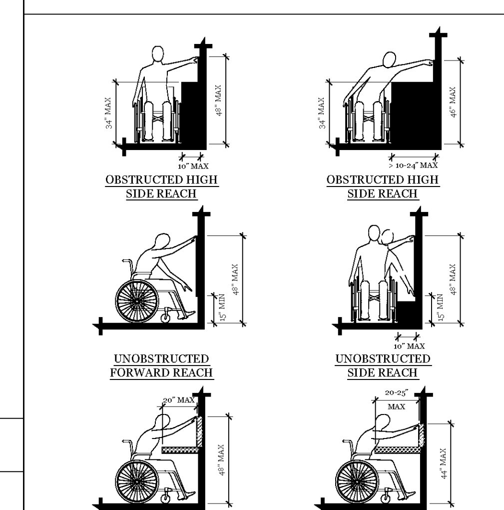

OBSTRUCTED HIGH SIDE REACH

OBSTRUCTED HIGH SIDE REACH

UNOBSTRUCTED FORWARD REACH

UNOBSTRUCTED SIDE REACH

OBSTRUCTED HIGH FORWARD REACH

OBSTRUCTED HIGH FORWARD REACH

CLEAR FLOOR SPACE

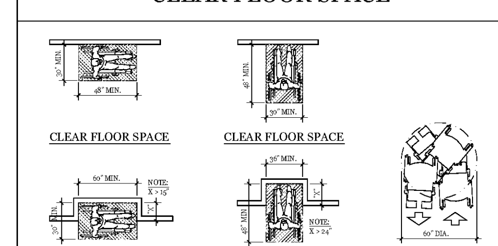

CLEAR FLOOR SPACE

CLEAR FLOOR SPACE

ALCOVE CLEARANCES PARALLEL APPROACH

ALCOVE CLEARANCES FORWARD APPROACH

TURNING SPACE

ACCESSIBILITY NOTES

1. THE REQUIRED CLEARANCE AROUND WATER CLOSETS SHALL BE PERMITTED TO OVERLAP THE WATER CLOSET, ASSOCIATED GRAB BARS, DISPENSERS, SANITARY NAPKIN DISPOSAL UNITS, COAT HOOKS, SHELVES, ACCESSIBLE ROUTES, CLEAR FLOOR SPACE AND CLEARANCES REQUIRED AT OTHER FIXTURES, AND THE TURNING SPACE. NO OTHER FIXTURES OR CONSTRUCTION SHALL BE LOCATED WITHIN THE REQUIRED WATER CLOSET CLEARANCE.

2. SEAT HEIGHT AT WATER CLOSETS SHALL BE 17-19" MAXIMUM.

3. FLUSH CONTROLS ON WATER CLOSETS SHALL BE HAND OPERATED OR AUTOMATIC. HAND CONTROLS SHALL BE ON THE OPEN SIDE OF THE WATER CLOSET.

4. MIRRORS LOCATED ABOVE LAVATORIES OR COUNTERTOPS SHALL BE INSTALLED WITH THE BOTTOM EDGE OF THE REFLECTING SURFACE 40 INCHES MAXIMUM ABOVE THE FINISH FLOOR. MIRRORS NOT LOCATED ABOVE LAVATORIES OR COUNTERTOPS SHALL BE INSTALLED WITH THE BOTTOM EDGE OF THE REFLECTING SURFACE 35 INCHES MAXIMUM ABOVE THE FINISH FLOOR. FULL LENGTH MIRROR TOPS TO BE AT 74 INCHES MIN.

5. LAVATORY DISPENSERS ARE TO BE WITHIN THE REACH LIMITS OF 46".

6. GRAB BAR REINFORCEMENT MUST BE SUFFICIENT TO PERMIT THE INSTALLATION OF REAR AND SIDE WALL GRAB BARS THAT FULLY MEET ALL ACCESSIBILITY REQUIREMENTS INCLUDING, BUT NOT LIMITED TO, REQUIRED LENGTH, INSTALLATION HEIGHT, AND STRUCTURAL STRENGTH.

7. HAND OPERATED METERING FAUCETS AT LAVATORIES SHALL REMAIN OPEN FOR 10 SECONDS.

8. WATER SUPPLY AND DRAIN PIPES UNDER LAVATORIES AND SINKS SHALL BE INSULATED OR OTHERWISE CONFIGURED TO PROTECT AGAINST CONTACT. THERE SHALL BE NO SHARP OR ABRASIVE SURFACES UNDER LAVATORIES AND SINKS.

9. NO MORE THAN ONE BOWL OF A MULTI-BOWL SINK SHALL BE REQUIRED TO PROVIDE KNEE AND TOE CLEARANCES.

10. A SHOWER SPRAY UNIT WITH A HOSE 59 INCHES LONG MINIMUM THAT CAN BE USED BOTH AS A FIXED-POSITION SHOWER HEAD AND AS A HAND-HELD SHOWER SHALL BE PROVIDED. THE SHOWER SPRAY UNIT SHALL HAVE AN ON/OFF CONTROL WITH A NON-POSITIVE SHUT-OFF. IF AN ADJUSTABLE-HEIGHT SHOWER HEAD ON A VERTICAL BAR IS USED, THE BAR SHALL BE INSTALLED SO AS NOT TO OBSTRUCT THE USE OF GRAB BARS.

11. THRESHOLDS IN ROLL-IN TYPE SHOWER COMPARTMENTS SHALL BE 1/2 INCH HIGH MAXIMUM. THRESHOLDS SHALL BE BEVELED OR ROUNDED.
*EXCEPTION: A THRESHOLD OF 2 INCHES MAXIMUM SHAL BE PERMITTED IN TRANSFER TYPE SHOWERS IN EXISTING FACILITIES WHERE 1/2 INCH THRESHOLD WOULD DISTURB THE STRUCTURAL REINFORCEMENT OF THE FLOOR SLAB.

12. SWIMMING POOLS SHALL HAVE TWO ACCESSIBLE MEANS OF ENTRY.
*EXCEPTION: WHERE A SWIMMING POOL HAS LESS THAN 300 LINEAR FEET OF SWIMMING POOL WALL, NO MORE THAN ONE ACCESSIBLE MEANS OF ENTRY SHALL BE REQUIRED, PROVIDED IT IS A LIFT.

13. WASHING MACHINES & DRYERS: TOP LOADING MACHINES SHALL HAVE THE DOOR TO THE LAUNDRY COMPARTMENT LOCATED 36 INCHES MAXIMUM ABOVE FLOOR. FRONT LOADING MACHINES SHALL HAVE THE BOTTOM OF THE OPENING TO THE LAUNDRY COMPARTMENT LOCATED 15 INCHES MINIMUM AND 36 INCHES MAXIMUM ABOVE FLOOR.

14. TACTILE CHARACTERS ON SIGNS SHALL BE LOCATED 48 INCHES MINIMUM ABOVE THE FINISH FLOOR, MEASURED FROM THE BASELINE OF THE LOWEST TACTILE CHARACTER AND 60 INCHES MAXIMUM ABOVE THE FINISH FLOOR, MEASURED FROM THE BASELINE OF THE HIGHEST TACTILE CHARACTER.

15. ALL DOOR CONTROLS AREA TO BE "LEVER" HANDLE TYPE CONFORMING TO "ADA" STANDARDS FOR HANDICAPPED ACCESSIBILITY.

16. ALL DOORS NOTED AS "EXIT" DOORS IN THE REMARKS COLUMN OF THE DOOR SCHEDULE, ARE TO BE OPERABLE FROM INSIDE WITHOUT THE USE OF A KEY OR ANY SPECIAL KNOWLEDGE OR EFFORT.

17. DOORS SHALL NOT SWING INTO THE CLEAR FLOOR SPACE OR CLEARANCE REQUIRED FOR ANY FIXTURE. DOORS SHALL BE PERMITTED TO SWING INTO THE REQUIRED TURNING SPACE
*EXCEPTION: DOORS TO A TOILET ROOM OR BATHING ROOM FOR A SINGLE OCCUPANT ACCESSED ONLY THROUGH A PRIVATE OFFICE AND NOT FOR COMMON USE OR PUBLIC USE SHALL BE PERMITTED TO SWING INTO THE CLEAR FLOOR SPACE OR CLEARANCE PROVIDED THE SWING OF THE DOOR CAN BE REVERSED AND COMPLY WITH STATED ABOVE.

18. THE MINIMUM CLEAR WIDTH OF AN ACCESSIBLE ROUTE SHALL BE 36" EXCEPT AT DOORS.

19. DOORWAYS SHALL PROVIDE A CLEAR OPENING OF 32" MINIMUM, WITH THE DOOR OPEN 90°.

Order Plans @ www.LDILine.com

Project

Sam's Xpress Car Wash
4965 University Parkway
Winston-Salem, NC 27106

Owner

Sam's Mart
7935 Council Place
Suite 200
Matthews, NC 28105

124 Floyd Smith Dr
Suite 375
Charlotte, NC 28262
Tel - 704 - 688-7500

2000 Sam Rittenberg Blvd.
Suite 116
Charleston, SC 29407
Tel - 843 - 531-6848

www.R4architecture.com

Revision	Date

Drawn By	TRB
Checked By	MJR
Issue Date	06.15.17
Project No	170382

Sheet Title

GENERAL ADA DETAILS
2009 ANSI 117.1

Sheet Number

G004