DIVISION 1 - GENERAL
1.1 ALL DESIGNS, CONSTRUCTION, MATERIALS AND WORKMANSHIP SHALL COMPLY WITH THE INTERNATIONAL BUILDING CODE WITH NORTH CAROLINA DETAIL AND QUALITY. ALL WORK INCLUDED THE CONSTRUCTION OF THIS PROJECT SHALL COMPLY WITH ALL APPLICABLE PROVISIONS OF THE CODE. BY COMMENCING CONSTRUCTION, CONTRACTOR ACKNOWLEDGES UNDERSTANDING OF THE IBC AND AGREES TO INCORPORATE REQUIRED ELEMENTS, WHETHER INDICATED WITHIN THE DOCUMENTS OR NOT.
1.2 CONTRACTOR SHALL BE RESPONSIBLE FOR ALL CONSTRUCTION MEANS, METHODS, TECHNIQUES, SEQUENCES AND PROCEDURES AND FOR SAFETY PRECAUTIONS AND PROGRAMS AS THEY RELATE TO THE WORK OF THIS PROJECT.
1.3 CONTRACTOR SHALL BE RESPONSIBLE FOR THE DESIGN, ENGINEERING, PERMITTING AND ERECTION OF ALL TEMPORARY SCAFFOLDING, HOISTS, BRACING, FORM WORK, SHEETING, SHORING AND UNDERPINNING NECESSARY TO PERFORM THE WORK. MAINTAIN BRACING UNTIL ALL BUILDING FRAMING & SHEATHING IS COMPLETE.
1.4 ALL AREAS SHALL BE ACCESSIBLE TO THE HANDICAPPED, IN ACCORDANCE WITH NORTH CAROLINA STATEWIDE BUILDING CODE (IBC) AND AMENDMENTS AND APPLICABLE AMERICANS WITH DISABILITIES ACT (ADA) ACCESSIBILITY GUIDELINES.
1.5 CONTRACTOR SHALL VERIFY ALL EXISTING CONDITIONS AND DRAWING DIMENSIONS PRIOR TO COMMENCING ANY WORK. ANY INCONSISTENCIES WITH THE DRAWINGS SHALL BE REPORTED TO THE ARCHITECT IN WRITING PRIOR TO COMMENCING WORK. FAILURE TO REPORT INCONSISTENCIES WILL RELIEVE ARCHITECT AND OWNER FROM ANY CLAIM FOR ADDITIONAL WORK REQUIRED RELATED TO THE INCONSISTENCY.
1.6 IN CASE OF CONFLICT BETWEEN THE GENERAL NOTES, SPECIFICATIONS, AND DRAWINGS REGARDING STRUCTURAL ISSUES, THE MOST STRINGENT REQUIREMENTS SHALL GOVERN.
1.7 WORK NOT INDICATED ON A PART OF THE DRAWINGS, BUT REASONABLY IMPLIED TO BE SIMILAR TO THAT SHOWN AT CORRESPONDING PIECES, SHALL BE REPEATED.
1.8 SHOP DRAWINGS: SHOP DRAWINGS SHALL BE SUBMITTED TO PAYMAN NADIMI AT SAMS REAL ESTATE (PNADIMI@SAMSRE.COM) FOR REVIEW AND APPROVAL.

DIVISION 2 - SITE
REFERENCE CIVIL SHEETS

DIVISION 3 - CONCRETE
REFERENCE S-001

DIVISION 4 - MASONRY
REFERENCE S-001

DIVISION 5 - METAL

REFERENCE S-001

DIVISION 6 - WOOD
REFERENCE S-001

DIVISION 7 - THERMAL AND MOISTURE PROTECTION
7.1 INCLUDE SILL PLATE INSULATION, CAULKING OF SILLS AND PLATES AND FOAM INJECTIONS AT WINDOW AND DOOR SHIM SPACE.
7.2 RIGID PERIMETER INSULATION SHALL BE ASTM C578, TYPE IV; COMPRESSIVE STRENGTH: 20LB. PER SQUARE INCH, MINIMUM (ASTM D1621); WATER ABSORPTION: 0.1% BY VOLUME, MAXIMUM (STM C272).
7.3 FIBERGLASS BATT INSULATION FOR CONCEALED INSTALLATIONS: SHALL HAVE A FLAME SPREAD RATING OF 25 OR LESS, AND SMOKE DEVELOPMENT OF 450 OR LESS, PER IBC 719.2, AND SHALL COMPLY WITH THE FOLLOWING: KRAFT FACED THERMAL BATT INSULATION COMPLYING WITH ASTM C665, TYPE II, CLASS C.
7.4 FIBERGLASS BATT INSULATION FOR EXPOSED (CEILING) INSTALLATIONS: FSK-FACED COMPLYING WITH ASTM C665, TYPE III, CLASS A, WITH FLAME SPREAD OF 25 OR LESS AND SMOKE DEVELOPMENT OF 450 OR LESS, PER IBC 719.3
7.5 PROVIDE 15MIL VAPOR BARRIER UNDER CONCRETE SLAB ON GRADE- BY STEGOWRAP INDUSTRIES OR EQUAL. (SEAL ALL JOINTS & PENETRATIONS).
7.6 STAINLESS STEEL FLASHINGS TO BE MINIMUM 24 GAGE, ASTM A 167, SOFT ANNEALED, WITH NO. 2D FINISH. C COPPER FLASHINGS TO BE 16 OZ.
7.7 SEALANTS: SHALL BE NON-SAG, SILICONE TYPE. COLOR TO MATCH ADJACENT MASONRY ON EXTERIOR AND WINDOW TRIM AT WINDOW. SUBMIT SAMPLES TO ARCHITECT FOR APPROVAL. NOTE THAT MORE THAN (1) SEALANT COLOR WILL BE REQUIRED. VERIFY COLOR LOCATIONS WITH ARCHITECT PRIOR TO INSTALLATION.
7.8 SOFFIT VENTS SHALL BE INVISIVENT MANUFACTURED BY CERTAINTEED TO SUPPLY MINIMUM 10 SQ. INCHES NET FREE VENT AREA PER SQUARE FOOT OF SOFFIT. INSTALL PER MANUFACTURER'S STANDARD DETAIL.
7.9 PROVIDE CONTINUOUS 6 MIL POLYETHYLENE VAPOR RETARDER BELOW UNHEATED ATTIC SPACES IN TUNNEL AREA ONLY IN COMPLIANCE WITH IBC 1403.3.
7.10 GENFLEX EDPM FULLY ADHERED SYSTEM OR EQUAL
GENFLEX EPDM MEMBRANE SHALL HAVE A MEMBRANE THICKNESS OF 60 MIL (1.52 MM). THE COMPONENTS OF THE GENFLEX EPDM FULLY ADHERED ROOFING SYSTEM ARE TO BE PRODUCTS OF GENFLEX ROOFING SYSTEMS OR APPROVED BY GENFLEX ROOFING SYSTEMS AS COMPATIBLE AND ACCEPTABLE. UNLESS SPECIFICALLY INCLUDED IN THE WARRANTY COVERAGE BY GENFLEX ROOFING SYSTEMS, PRODUCTS BY OTHERS ARE EXCLUDED FROM COVERAGE. THE ROOFING SYSTEM MUST BE INSTALLED BY A GENFLEX ROOFING SYSTEMS LICENSED CONTRACTOR. WARRANTY SHALL BE A MINIMUM OF 10 YEARS.
7.11 CONSTRUCTION METAL PRODUCTS SERIES MULTI-RIB, 24 GA. 36"COVERAGE, EXPOSED FASTER METAL RIB PANEL.

DIVISION 8 - DOORS AND WINDOWS
8.1 GLAZING: INSULATED 5/8" INSULATED UNITS, ASTM 1036, TYPE 1, QUALITY Q5. TEMPER UNITS AS REQUIRED PER NCBC SECTION 2406.
TINTING: REFERENCE A600.
8.2 KAWNEER ARCHITECTURAL ALUMINUM STOREFRONT SYSTEM: TRIFAB VG 451T - 2" X 4½" (50.8 X 114.3) NOMINAL DIMENSION. OUTSIDE GLAZE, FRONT STRUCTURAL SILICONE GLAZED (SSG) FORMAT WTH ENTRANCE DOORS.
A. PERFORMANCE REQUIREMENTS:
1. WIND LOADS: PROVIDE STOREFRONT SYSTEM; INCLUDE ANCHORAGE, CAPABLE OF WITHSTANDING WIND LOAD DESIGN INWARD AND OUTWARD DESIGN PRESSURES AS REQUIRED2012 NORTH CAROLINA STATE BUILDING CODE.
2. AIR INFILTRATION: THE TEST SPECIMEN SHALL BE TESTED IN ACCORDANCE WITH ASTM E 283. AIR INFILTRATION RATE SHALL NOT EXCEED 0.06 CFM/FT2 (0.3 L/S · M2) AT A STATIC AIR PRESSURE DIFFERENTIAL OF 6.24 PSF (300 PA).
3. WATER RESISTANCE: THE TEST SPECIMEN SHALL BE TESTED IN ACCORDANCE WITH ASTM E 331. THERE SHALL BE NO LEAKAGE AT A MINIMUM STATIC AIR PRESSURE DIFFERENTIAL OF 8 PSF (383 PA) AS DEFINED IN AAMA 501.
4. UNIFORM LOAD: A STATIC AIR DESIGN LOAD OF 35 PSF (1680 PA) SHALL BE APPLIED IN THE POSITIVE AND NEGATIVE DIRECTION IN ACCORDANCE WITH ASTM E 330. THERE SHALL BE NO DEFLECTION IN EXCESS OF L/175 OF THE SPAN OF ANY FRAMING MEMBER. AT A STRUCTURAL TEST LOAD EQUAL TO 1.5 TIMES THE SPECIFIED DESIGN LOAD, NO GLASS BREAKAGE OR PERMANENT SET IN THE FRAMING MEMBERS IN EXCESS OF 0.2% OF THEIR CLEAR SPANS SHALL OCCUR.

DIVISION 9 - FINISHES
9.1 ALL INTERIOR FINISHES SHALL HAVE A MAXIMUM FLAMESPREAD RATING OF ASTM E 84 CLASS C (FLAME SPREAD 76-200) (SMOKE DEVELOPMENT 0-450) (IBC TABLE 803.5). INTERIOR FLOOR FINISHES TO MEET THE REQUIREMENTS AS OUTLINED IN IBC SECTION 804.0.
9.2 GYPSUM BOARD AND WOOD ASSEMBLIES SHALL BE SECURED TO STUDS AT SPACING INDICATED BY GYPSUM BOARD MANUFACTURER WITH FASTENERS SPECIFIED BY SAME. PROVIDE SHEET STEEL ZINC COATED BY HOT DIP PROCESS TRIM ACCESSORIES COMPLYING WITH ASTM C1047. TRIM INCLUDES CORNER BEAD, IC BEAD, SCREW HEADS, AND IRREGULARITIES. SAND SMOOTH. PROVIDE METAL CONTROL JOINTS PER GA -216-2004; SECTION 4.7.3" "...SO THAT LINEAR DIMENSIONS BETWEEN CONTROL JOINTS DO NO EXCEED 30 FEET AND TOTAL AREA BETWEEN CONTROL JOINTS DOES NOT EXCEED 900 FEET." BULLNOSE ALL OUTSIDE CORNERS AND ALL INTERIOR GYP. BD. RETURNS AT DOORS AND WINDOWS.
9.3 PROVIDE GYPSUM WALL BOARD FOR ALL WALLS AND CEILINGS. ALL INTERIOR GYPSUM BOARD SHALL BE 5/8 INCH THICK. PROVIDE MOISTURE RESISTANT BOARD IN BATHROOMS, TUNNEL AND EQUIPMENT ROOM.
9.4 ALL CABINETS AND DRAWERS TO BE SELECTED BY OWNER.
9.5 VINYL COVE BASE TO BE SELECTED BY OWNER.
9.6 INTERIOR PAINT: INTERIOR PAINT & FINISHES AS SELECTED BY OWNER SUPPLIED AND SPECIFIED BY OTHERS.
9.7 EXTERIOR PAINT FOR DOOR AND FRAMES: PROVIDE 1 COAT SHERWIN WILLIAMS ALL SURFACE ENAMEL LATEX PRIMER AND 2 COATS SHERWIN WILLIAMS ALL SURFACE LATEX ENAMEL HIGH GLOSS. COLOR AS SELECTED BY OWNER.
9.8 ACOUSTICAL PANEL CEILING: 2'X2' LAYIN CEILING SHALL BE CORTEGO EANGLED TEGULAR TILE BY ARMSTRONG W/ 15/16" PRELUDE XL GRID.
9.9 PLASTIC WALL PANELS SHALL BE OCTAFORM QUICK LINER PANELS 18" WIDE TONGUE AND GROOVE DESIGN PANELS. SCREW TO MASONRY BLOCK W/ 3/16" X 1-1/4" FLAT HEAD TAPCON SCREWS WITH 1/4" STAINLESS STEEL WASHERS.
9.10 PLASTIC CEILING PANELS SHALL BE OCTAFORM QUICK LINER PANELS 18" WIDE TONGUE AND GROOVE DESIGN PANELS. SCREW TO WOOD WITH NO. 8 X 1-1/4" TRUSS PHILLIPS HEAD SCREWS.
9.11 SENERGY PLATINUM CI STUCCO ULTRA IS A CONTINUOUSLY INSULATED PORTLAND CEMENT STUCCO SYSTEM. INTEGRATED SYSTEM COMPONENTS INCLUDE SENERSHIELD-R , BASF DRAINAGE MAT, R-5 NEOPOR RIGID INSULATION BOARD, LATH, ½" MIN. BASF STUCCOBASE, SENERGY BASE COAT AND FINISH.

DIVISION 10 - SPECIALTIES
10.1 SIGNAGE: PLASTIC LAMINATE, SQUARE CUT, UNFRAMED AND ROUNDED CORNERS. MINIMUM 8"X8" AS REQUIRED TO FILL TEXT, ALL SIGNS TO BE THE SAME SIZE. PROVIDE 1" HIGH TACTILE AND BRAILLE COPY, RAISED NOT LESS THAN 1/32", FONT STYLE "ARIAL". PROVIDE ACCESSIBILITY SYMBOLS ON ADA ACCESSIBLE RESTROOMS. COLORS TO BE PMS RED 186 AND BLUE 286 WITH WHITE LETTERINGS.

DIVISION 11 - EQUIPMENT
REFERENCE CAR WASH EQUIPMENT SHEETS.

DIVISION 12 - FURNISHINGS
FURNITURE IS OWNER FURNISHED AND OWNER INSTALLED.

DIVISION 13 - SPECIAL CONSTRUCTION
NOT APPLICABLE.

DIVISION 14 - CONVEYING SYSTEMS
NOT APPLICABLE.

DIVISION 15 - MECHANICAL
REFERENCE MECHANICAL AND PLUMBING PLANS FOR SPECIFICATIONS.

DIVISION 16 - ELECTRICAL
REFERENCE ELECTRICAL PLANS FOR SPECIFICATIONS.

SECTION
POLISHED AND STAINED CONCRETE FLOOR

PART 1 GENERAL
1.01 SUMMARY
A. Drawings and general provisions of Contract, including General and Supplementary Conditions and Division 1 Specification sections, apply to Work of this Section.
B. Section Includes:
1. Mechanical grinding of floor surface with diamonds.
2. General Contractor to provide an integral dyed concrete floor.
3. Approved chemical reactive concrete stabilizer to enhance density and hardness of concrete.
4. Floor Finish: final polished with a 1500-grit diamond resin and burnished
5. Approved Cleanser.
6. Polish: high-speed floor burnisher 3000 grit pad.
7. Slip and skid resistance to exceed OSHA and ADAAG recommendations for Static Co-Efficient of Friction Test (SCOF wet and dry) for hard surfaces.
C. Related Sections:
1. Division 3 Section "Cast-In-Place" for general applications of concrete.
1.02 SUBMITTALS
A. Product Data: Manufacturer's technical data sheets and installation instructions for each product specified.
B. Samples for Initial Selection provided by Manufacturer per Specifier's Requirements: Manufacturer's color charts showing full range of colors available.
C. Qualification Data: For firms proposing to do polished concrete floors, include lists of completed projects with project names and addresses and names and addresses of architects and owners.
1.03 QUALITY ASSURANCE
A. Manufacturer Qualifications: Manufacturer of densifier products shall have minimum 3 years experience in the production of chemical dyes and densifiers.
B. Installer Qualifications: Minimum 10 years experience in polished concrete floors. Applicator shall be Certified by Manufacturer.
C. Substitutions: The use of any products other than those specified shall be considered providing that the Contractor requests its use in writing within 10 days prior to bid date. This request shall be accompanied by:
1. A certificate of compliance, along with product and installation data, from the material manufacturer stating that the proposed products meet or exceed the requirements specified for application to polished concrete with densifier.
D. Source Limitations: Obtain each specified material from same source and maintain high degree of consistency in workmanship throughout Project.
E. Assure that all products used in the polished concrete floor are compatible with one another.
1.04 DELIVERY, STORAGE AND HANDLING
A. Deliver the specified products in original, unopened containers with legible manufacturer's identification and information.
B. Store specified products in conditions recommended by the manufacturer.

1.05 PROJECT CONDITIONS
A. Environmental Conditions: Maintain ambient temperature of between 50°F and 90°F during application and at least [illegible] hours after application.
B. Protection: Precautions shall be taken to avoid damage or contamination of any surfaces near the work zone. Protect completed dye work from moisture or contamination.
C. All equipment must be diapered and have non-marking tires. Do not allow pipe cutting or welding to be performed on the slab. Do not use red or blue chalk lines, as they may permanently stain concrete. Signage is recommended.
1.06 PRE-JOB CONFERENCE
A. Prior to the start of the grinding of the concrete a meeting will be held to discuss the project and application of materials.
B. It is suggested that the Owner, General Contractor, Subcontractor and a Manufacturer Representative be present.
PART 2 PRODUCTS
2.01 REQUIRED MANUFACTURERS
A. Manufacturer: QuestMark Flooring 6301 Arrowridge Blvd Suite I, Charlotte, NC 28273. Contact: Dan Washburn: Direct Office Line: 980-272-2020; email: Daniel.Washburn@Centimark.com.

2.02 MATERIALS
A. Densifier:
1. Lithium based QuestMark PolishGuard.
B. Concrete floor finished to a 1500 resin and burnished polish.
C. Joint Sealant: Provide joint sealant as specified by manufacturer for crack management. Material shall be colored to match proposed finish.

PART 3 EXECUTION
3.01 EXAMINATION
A. Verification of Conditions: Contractor and Owner's Representative shall examine areas and conditions under which work will be performed and identify conditions detrimental to proper and timely completion of work. Do not proceed until unsatisfactory conditions have been corrected.

3.02 PREPARATION
A. New Concrete:
1. Newly placed concrete shall be sufficiently cured for a recommended 28 days. Prior to polish work, contractor shall perform a field test to verify the moisture content of the concrete. It must be suitable for the application of the stain per manufacturer's recommendation.
2. Cure concrete flatwork with new, unwrinkled, non-staining, high quality curing paper or a breathable curing blanket. Do overlap paper or blankets. Tape seams.

3. Follow QuestMarks Diamond Quest System for diamond grinding steps. Start grinding with an 80 grit metal, proceed to a 150 grit metal. 100, 200, 400, 800 and 1500 resins. Finish with a 3000 grit burnishing pad. Hand edge of walls

3.03 APPLICATION OF SOLVENT-BASED DYE (IF NEEDED)
A. Concrete surfaces shall be dry and properly prepared as described above. Protect surrounding areas from over-spray, run-off and tracking.
B. Apply solvent-based dye at the coverage rate recommended by the manufacturer and use application equipment described in the manufacturer's printed technical literature.
3.04 APPLICATION OF COMMERCIAL DENSIFIER FOR POLISHED CONCRETE
A. Concrete must be thoroughly cleaned of solvent-based dye residual with water and white pad or brush prior to application of commercial densifier specifically manufactured for use with polished concrete.
B. Densifier shall be tested for compatibility with solvent-base dye.
C. Apply according to manufacturer's written instructions allowing to saturate the concrete and keep wet until the point of rejection.
3.05 APPLICATION OF STAIN SHIELD
A. Following final diamond polishing steps, clean floor with water and white pad or Brush, and allow to thoroughly dry prior to application of QuestMarks Guard.

3.06 INSTALLATION OF JOINT SEALANT
A. Installation and curing of joint sealant shall follow manufacturer's guidelines for specific stain/finish system.
3.07 PROTECTION
A. Protect floor from traffic and water for at least 72 hours after final application of Pro-guard Stain Shield.
3.08 MAINTENANCE
A. Maintain solvent-base dyed and densified floors by sweeping dry soils and particulate on a scheduled rotation. Clean spills when they occur and rinse dirt off with water. Wet-clean heavily soiled areas by mopping or by scrubbing with a rotary floor machine equipped with a white brush and QuestMarks Conditioning Cleaner.

END OF SECTION

GENERAL NOTES:

1. SEE CIVIL DRAWINGS FOR LOCATION AND CONTINUATION OF ALL SIDEWALKS AND ADA RAMPS FROM FACE OF BUILDING- TYP.

2. SEE CIVIL DRAWINGS FOR THE LOCATION OF ALL PIPING FROM INTERNAL ROOF LEADERS, SUPPLY AND DRAIN LINE CONNECTIONS- TYP.

3.ALL HORIZONTAL PROJECTIONS TO HAVE POSITIVE SLOPE ON TOP AND CONTINUOUS DRIP EDGE ON UNDERSIDE- TYP.

4.ALL CONNECTIONS SHALL BE FLASHED & COUNTER FLASHED TO MAINTAIN WATER & WEATHER TIGHT BLDG. ARCHITECT TO BE NOTIFIED IN WRITING OF ANY ONSITE CONDITIONS THAT MAY BE IN QUESTION.

5. ALL FIELD CONDITIONS AND ASSOCIATED DIMENSIONS SHALL BE FULLY FIELD VERIFIED BY INDVIDUAL VENDORS OR SUPPLIER'S PRIOR TO ANY WORK, MANUFACTURING, OR INSTALLATION OF ANY PRODUCT OR MATERIAL.

6. THE ARCHITECT SHALL NOT BE HELD LIABLE FOR ANY SUCH DISCREPANCIES OR FOR ANY REQUIRED FIELD VERIFICATION OF ACTUAL CONDITIONS. EACH INDIVIDUAL SUPPLIER OR VENDOR SHALL BE RESPONSIBLE FOR VERIFYING ALL FIELD CONDITIONS RELATED TO OR THAT MAY IMPACT THE SCOPE OR THEIR WORK PRODUCT.

7. ALL REQUIRED ADA SIGNAGE IS TO BE SUPPLIED BY OTHERS. INTERIOR SIGNAGE SHALL B E PROVIDED BY THE OWNER OR G.C. AND SHALL MEET ALL BUILDING CODE, MUNICIPAL AND ADA AND DOJ GUIDELINES AND REGULATIONS INCLUDING BUT NOT LIMITED TO TYPE, SIZE, LETTERING, FIGURES, BRAILLE OR MOUNTING HEIGHTS. WHERE MULTIPLE OR OVERLAPPING REGULATIONS CONFLICT WITH EACH OTHER THE MOST RESTRICTIVE SHALL APPLY. FINAL SELECTION OF THE TYPE AND FINISH OF SIGNAGE SHALL BE BY THE OWNER.

8. DO NOT SCALE DRAWINGS. USE DIMENSIONS INDICATED ON DRAWING FOR ALL WORK.

9. IF A DIMENSION IS NOT SHOWN, THE G.C. SHALL REQUEST A CLARIFICATION FROM THE ARCHITECT PRIOR TO PROCEEDING WITH THE WORK.

10. EXTERIOR WALL BLOCKING AS REQUIRED-
(3) OPTIONS FOR BLOCKING:
OPTION 1- P.T.WOOD FULLY WRAPPED IN EPDM MEMBRANE OR TPO ROOFING MEMBRANE, TO PREVENT DIRECT CONTACT BETWEEN P.T. WOOD AND STEEL, STAINLESS STEEL, NAILS, BOLTS,WASHERS, & NUTS MUST BE USED- TYP.
OPTION 2- USE CEDAR 2X BLOCKING
OPTION 3- USE "TIMBER SILL" BLOCKING

11. ALL STRUCTURAL STEEL, INCLUDING COLUMNS,BEAMS, JOISTS, GIRDERS, ROOF DECKING AND MISCELLANEOUS METALS SHALL BE DELIVERED TO THE SITE WITH A RUST INHIBITIVE GRAY PRIMER SHOP FINISH.

12. SEE ALSO G SERIES FOR LIFE SAFETY PLAN AND INFORMATION- TYP.

13. UNLESS OTHERWISE NOTED ALL DIMENSIONS OF FROM FACE OF STUD OR FACE OR MASONRY. THE G.C. SHALL ALSO COORDINATE MIN./MAX. CLEAR DIMENSIONS WITH OVERALL DIMENSIONS.

14. THE GENERAL CONTRACTOR AND ASSOCIATED SUB CONTRACTORS SHALL COORDINATE AND VERIFY ALL DIMENSIONS ON THE PLANS, SECTIONS, ELECTIONS, AND DETAILS ACROSS TRADES PRIOR TO CONSTRUCTION ORDERING OF MATERIALS.

15. THE GENERAL CONTRACTOR SHALL MAINTAIN A CURRENT RECORD SET OF AS BUILT CONDITIONS ON THE SITE AT ALL TIMES. UPON COMPLETION OF THE PROJECT THE G.C. SHALL PROVIDE BOTH THE OWNER AND THE ARCHITECT WITH A COPY OF THE DRAWINGS NOTING THE FINAL AS BUILT CONDITIONS OF THE PROPERTY.

16. THE ARCHITECT SHALL BE NOTIFIED OF ANY DISCREPANCIES, OMISSIONS, OR ERRORS FOUND BY THE G.C. OR ANY OF THEIR SUBCONTRACTORS. THE G.C. SHALL THEN PROCEED PER THE ARCHITECTS WRITTEN CLARIFICATION OR DIRECTION IN RESPONSE TO ANY DISCREPANCY, ERROR, OR OMISSION THAT IS DISCOVERED.

17. ALL REQUIRED FIRE EXTINGUISHERS SHALL BE RECESSED OR SEMI RECESSED. FINAL LOCATION OF ALL REQUIRED FIRE EXTINGUISHERS

VENDORS & OWNER REP.

NOTE TO ALL OWNER'S REPRESENTATIVES, VENDORS, AND THIRD PARTY REPRESENTATIVES OR SUPPLIERS:

ALL FINAL AND ACTUAL FIELD CONDITIONS AND ASSOCIATED DIMENSIONS SHALL BE FULLY FIELD VERIFIED BY INDIVIDUAL VENDORS OR SUPPLIERS PRIOR TO ANY WORK, MANUFACTURING, OR INSTALLATION OCCURRING- TYP. THE FOLLOWING CONTRACT DOCUMENTS SHALL BE USED ONLY AS A GUIDE FOR REFERENCE PRIOR TO ANY ACTUAL ON SITE FIELD VERIFICATION AS CONDITIONS, DIMENSIONS, MAY MODIFY SLIGHTLY FROM THESE DOCUMENTS DUE TO FIELD CONDITIONS AND OR MODIFICATIONS.

ACCORDINGLY NEITHER THE G.C. NOR THE ARCHITECT SHALL BE HELD LIABLE FOR ANY SUCH DISCREPANCIES NOR FOR FIELD VERIFYING OF ANY ACTUAL CONDITIONS, RATHER EACH INDIVIDUAL SUPPLIER OR VENDOR SHALL BE LIABLE FOR VERIFYING OF ALL FIELD CONDITIONS THAT ARE EITHER RELATED TO OR MAY IMPACT THEIR SCOPE, OR FINAL WORK PRODUCT- TYP.

ADA SIGNAGE

NOTE ALL SIGNAGE IS BY OTHERS, WHERE REQUIRED SIGNAGE SHALL BE PERMITTED SEPARATELY- TYP. RELATED TO INTERIOR SIGNAGE PROVIDED BY OWNER/ OR G.C. THE FOLLOWING SHALL APPLY:

WHERE REQUIRED ALL PUBLIC SIGNAGE SUCH AS FOR, BUT NOT LIMITED TO, SIGNAGE FOR ANY PUBLIC SPACES, SUCH AS MEETING ROOMS, REST ROOMS, EGRESS ETC. SHALL MEET ALL CODE, MUNICIPAL, ADA, AND DOJ REGULATIONS RELATED, BUT NOT LIMITED TO, TYPE AND SIZE OF LETTERING AND OR FIGURES, INCLUSION OF BRAIL, AND MOUNTING HEIGHTS ETC. WHERE MULTIPLE OR OVERLAPPING REGULATIONS CONFLICT WITH EACH OTHER THE MOST RESTRICTIVE OF ALL SHALL APPLY- TYP. FINAL SELECTION OF THE TYPE AND FINISH OF SIGNAGE SHALL BE BY THE OWNER- TYP.

DIVISION OF SCOPE

SEE ARCHITECTURAL DRAWINGS RELATED TO NOTES RELATED TO THE DIVISION OF SCOPE BETWEEN THE ARCHITECT OF RECORD AND THE I.D./ DECOR- TYP. NOTIFY THE ARCHITECT OF RECORD OF ANY DISCREPANCIES BETWEEN THE SCOPES OF WORK THOUGH ANY DIVISION BETWEEN THE TWO SCOPES NOTED ON THE ARCHITECT OF RECORD DOCUMENTATION SHALL TAKE PRECEDENT OVER THAT OF WHAT I.D. DRAWINGS MAY SUGGEST. IF A DIVISION OF SCOPE IS UNCLEAR IT SHALL BE NOTED TO THE ARCHITECT OF RECORD IN WRITING FOR CLARIFICATION PRIOR TO PROCEEDING WITH ANY WORK AND THE ARCHITECT OF RECORD SHALL CLARIFY DIVISION OF SCOPE ACCORDINGLY.

DIMENSIONS

1. DO NOT SCALE DRAWINGS USE DIMENSIONS INDICATED ON DRAWINGS FRO LAYOUT OF ALL WORK- TYP.

2. IF A DIMENSIONS IS NOT SHOWN OR IN QUESTION, G.C. SHALL REQUEST A CLARIFICATION FROM THE ARCHITECT PRIOR TO PROCEEDING WITH WORK.

3. UNLESS OTHERWISE NOTED MOST DIMENSIONS ARE FROM STUD TO STUD- THOUGH G.C. TO ALSO TAKE NOTE OF MIN./ MAX. FINISH CLEAR DIMENSIONS PROVIDED AS WELL- TYP.

4. CONTRACTOR AND ASSOCIATED SUB CONTRACTORS SHALL COORDINATE AND VERIFY ALL DIMENSIONS IN COORDINATION BETWEEN PLANS, ELEVATIONS, SECTIONS, AND DETAILS, ACROSS TRADES PRIOR TO CONSTRUCTION OR ORDERING ANY MATERIALS AND SHALL NOTIFY THE ARCHITECT IN WRITING OF ANY DISCREPANCIES.

FINISHES

1. UNLESS OTHERWISE NOTED ALL FINISHES AND FIXTURES SHALL BE SELECTED BY THE OWNER.
2. THE CONTRACTOR SHALL COORDINATE ALL FINISH SELECTIONS WITH ARCHITECTURAL DRAWINGS TO INSURE PROPER INSTALLATION AND TO VERIFY THAT ALL FINISH AND FIXTURE INSTALLATIONS CONFORM WITH ADA CLEARANCE AND DIMENSIONS AS SHOWN ON THE ARCHITECTURAL DRAWINGS.

ELECTRICAL BOXES:

NOTE: WHETHER SPECIFICALLY NOTED HERE IN OR NOT WERE ELECTRICAL BOXES ARE WITHIN A RATED WALL THE ELECTRICAL BOXES AND ANY PENETRATIONS WITHIN THOSE RATED WALLS SHALL MATCH THE WALL RATING FOR PROTECTION- TYP.

DRAFTSTOPS

PROVIDE DRAFTSTOPPING TO CREATE HORIZONTAL AREAS NOT TO EXCEED 1,000 SQ. FT. FLOOR AREAS AND 3,000 SQ. FT. ROOF/ATTIC AREAS (IBC 717.4). USE MIN. 1/2" GYPSUM BOARD OR MIN. 3/8" PLYWOOD FOR DRAFTSTOPPING.

KNOX BOX

THE ATTACHED KNOX BOX DETAIL IS FOR REFERENCE ONLY- TYP. FINAL KNOX BOX SELECTION AND INSTALLATION SHALL BE PER MANUFACTURER'S WRITTEN INSTRUCTIONS- TYP.

ADDITIONALLY WHEREAS EACH MUNICIPALITY AND INDIVIDUAL FIRE MARSHAL WILL HAVE DIFFERENT REGULATIONS AND OR PREFERENCES FOR THE FINAL LOCATION AND INSTALLATION OF THE KNOX BOX R4 ARCHITECTURE DOES NOT AND WILL NOT SPECIFICALLY LOCATE THE FINAL KNOX BOX LOCATION ON THE PLANS- TYP. WE HIGHLY RECOMMEND THAT THE G.C. COORDINATE WITH BOTH THE OWNER AND LOCAL MUNICIPALITY/ FIRE MARSHAL RELATED TO THE FINAL LOCATION AND INSTALLATION OF THE KNOX BOX ON SITE AS WELL AS OBTAIN WRITTEN APPROVAL FROM THE LOCAL MUNICIPALITY PRIOR TO ORDERING OR INSTALLATION OF THE KNOX BOX- TYP.

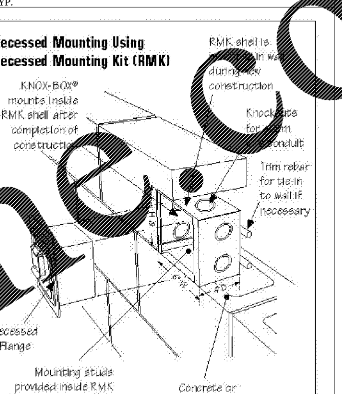

FIRE EXTINGUISHERS

THE ATTACHED FIRE EXTINGUISHER DETAILS IS FOR REFERENCE ONLY- TYP. FINAL FIRE EXTINGUISHER SELECTION AND INSTALLATION SHALL BE PER MANUFACTURER'S WRITTEN INSTRUCTIONS- TYP.

ADDITIONALLY WHEREAS EACH MUNICIPALITY AND INDIVIDUAL FIRE MARSHAL WILL HAVE DIFFERENT REGULATIONS AND OR PREFERENCES FOR THE FINAL LOCATION AND INSTALLATION OF THE FIRE EXTINGUISHERS R4 ARCHITECTURE DOES NOT AND WILL NOT SPECIFICALLY LOCATE THE FINAL LOCATION ON THE PLANS- TYP. WE HIGHLY RECOMMEND THAT THE G.C. COORDINATE WITH BOTH THE OWNER AND LOCAL MUNICIPALITY/ FIRE MARSHAL RELATED TO THE FINAL LOCATION, QUANTITY, AND INSTALLATION TYPES OF FIRE EXTINGUISHERS REQUIRED ON SITE AND THROUGH OUT THE BUILDING AS WELL AS OBTAIN WRITTEN APPROVAL FROM THE LOCAL MUNICIPALITY PRIOR TO ORDERING OR INSTALLATION OF ANY OF THE FIRE EXTINGUISHERS- TYP.

WHILE WE HAVE PROVIDED THE ATTACHED GENERAL DETAILS OF CABINET TYPES FOR REFERENCE PURPOSES ONLY, R4 ARCHITECTURE WILL NOT PROVIDE NOR TAKE LIABILITY FOR THE FINAL TYPE, QUANTITY, LOCATION, OR INSTALLATION TYPES OF ANY FIRE EXTINGUISHERS ON SITE, REQUIRED OR NOT - TYP.

THIS SAID ANY EXTINGUISHERS REQUIRED TO BE LOCATED IN A PUBLIC SPACE SHALL BE EITHER RECESSED OR SIMI RECESSED- ADDITIONALLY IF WITHIN A RATED WALL CARE SHALL BE TAKEN TO MAINTAIN BOTH THE REQUIRED FIRE AND STC RATING AT THE LOCATION OF THE CABINET- TYP. WHERE LOCATED IN NON PUBLIC AREAS AND ALLOWED BY BOTH THE OWNER AND LOCAL MUNICIPALITY A WALL MOUNTED EXTINGUISHER SHALL BE ACCEPTABLE- TYP. IN ALL CASES EXTINGUISHERS SHALL BE INSTALLED IN FULL COMPLIANCE WITH ADA REQUIREMENTS- TYP.

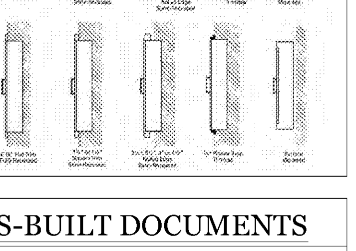

AS-BUILT DOCUMENTS

THE GENERAL CONTRACTOR SHALL MAINTAIN A CURRENT RECORD SET OF THE AS BUILT CONDITIONS ON SITE AT ALL TIMES. UPON PROJECT COMPLETION THE G.C. SHALL PROVIDE BOTH THE OWNER AND THE ARCHITECT WITH A COPY OF DRAWINGS NOTING THE FINAL AS BUILT CONDITIONS OF THE PROPERTY- TYP.

OMMISION & ERRORS

ANY DISCREPANCIES, OMISSIONS, OR ERRORS FOUND BY THE G.C. OR ANY OF THEIR SUBCONTRACTOR SHALL BE IDENTIFIED AND THE ARCHITECT SHALL BE NOTIFIED IN WRITING BY THE GENERAL CONTRACTOR IMMEDIATELY UPON DISCOVERY OF ANY DISCREPANCIES WITHIN THE CONTRACT DOCUMENTS OR FOUND ON SITE- TYP.

THE G.C. AND HIS OR HER SUB CONTRACTORS SHALL PROCEED PER THE ARCHITECT'S WRITTEN CLARIFICATION OR DIRECTION IN RESPONSE TO ANY DISCREPANCY, ERROR, OR OMISSION THAT IS FOUND.

MOCK UPS

NOTE: G.C. TO PROVIDE MOCK UP PANELS IN THE FIELD OF FINAL MATERIALS, COLORS, AND GENERAL ASSEMBLIES FOR APPROVAL PRIOR TO INSTALLATION ON ENTIRE PROJECT- TYP. MOCK UP AND COLORS SAMPLES SHALL BE A MIN. OF 48"X48" IN SIZE AND LOCATED ON THE SUNNY SIDE OF THE BUILDING OR SITE. G.C. SHALL ALSO PROVIDE SAMPLES OF CAULK COLORS AND INSTALLATION FOR APPROVAL PRIOR TO INSTALLATION ON THE ENTIRE PROJECT- TYP. ALL MOCK UPS, COLORS, AND SAMPLES SHALL BE SHALL BE APPROVED BY THE OWNER PRIOR TO INSTALLATION ON THE BUILDING- TYP.

Project
Sam's Xpress Car Wash
4965 University Parkway
Winston-Salem, NC 27106

Owner
Sam's Mart
7935 Council Place
Suite 200
Matthews, NC 28105

6/15/17

124 Floyd Smith Dr
Suite 375
Charlotte, NC 28262
Tel - 704 - 688-7500

2000 Sam Rittenberg Blvd.
Suite 116
Charleston, SC 29407
Tel - 843 - 531-6848

www.R4architecture.com

Revision	**Date**

Drawn By	TRB
Checked By	MJR
Issue Date	06.15.17
Project No	170382

Sheet Title
GENERAL NOTES
AND SPECIFICATIONS

Sheet Number
G003

Order Plans @ WWW.LDDLine.com