GENERAL:
1. P.C. SHALL INSULATE CW/HW SUPPLY PIPING FROM WATER HEATER INLET/OUTLET.
2. P.C. SHALL ROUTE VENT SYSTEM TO ROOF AND INSTALL CONCENTRIC FLUE KIT PER MANUFACTURERS RECOMMENDATIONS.
3. P.C. SHALL PROVIDE ALL CONTROLS WITH PACKAGE AND E.C. SHALL INSTALL ALL CONNECTIONS PER MANUFACTURERS RECOMMENDATIONS.
4. P.C. SHALL INSTALL 3/4" PIPING TO VENT SYSTEM CONDENSATE COLLECTOR AND ROUTE TO FLOOR DRAIN AND TERMINATE WITH 2" AIR GAP (MIN.).
5. P.C. SHALL INSTALL 3/4" PIPING TO PRESSURE RELIEF VALVE AND ROUTE TO DRAIN PAN AND TERMINATE WITH 2" AIR GAP (MIN.).

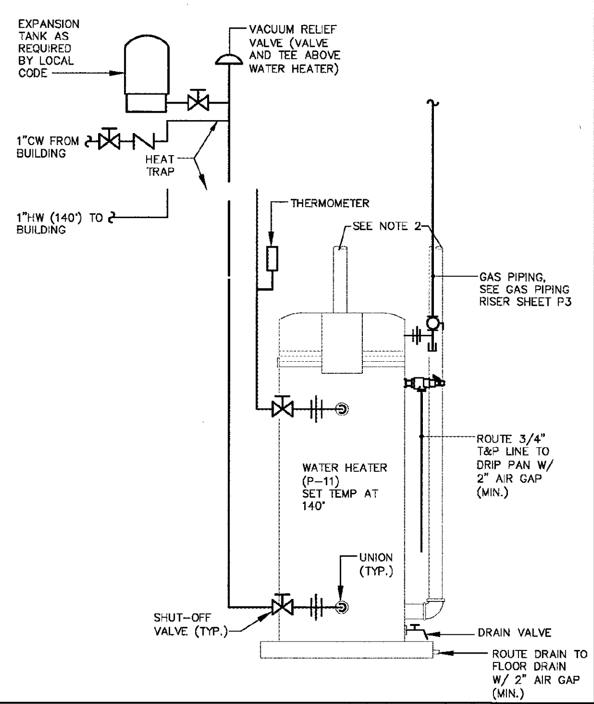


WATER HEATER DETAIL — SCALE: N.T.S. — 1

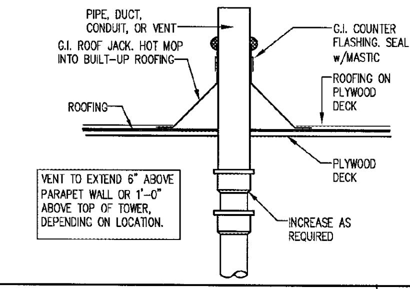


VENT THROUGH ROOF DETAIL — SCALE: N.T.S. — 2

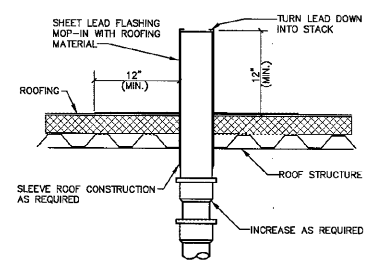


FLUE THROUGH ROOF DETAIL — SCALE: N.T.S. — 3

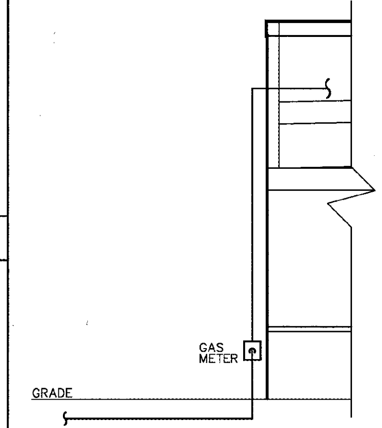


GAS LINE ELEVATION — SCALE: N.T.S. — 4

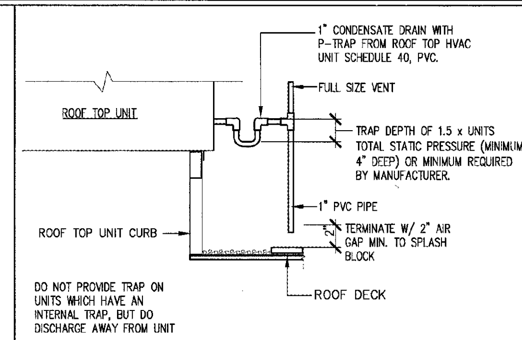


CONDENSATE PIPE DTL. — SCALE: N.T.S. — 5

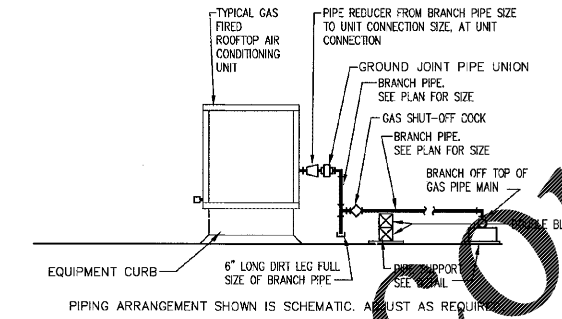


ROOFTOP UNIT CONNECTIONS — SCALE: N.T.S. — 6

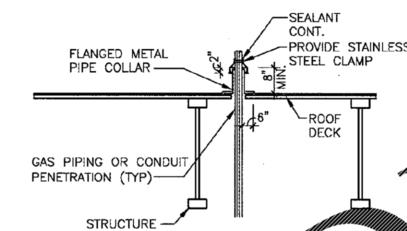


PIPE SEAL THRU ROOF — SCALE: N.T.S. — 7

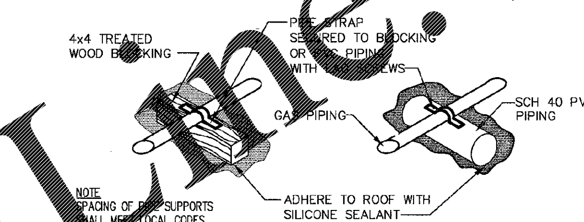


PIPE SUPPORT — SCALE: N.T.S. — 8

NOT USED — SCALE: N.T.S. — 9

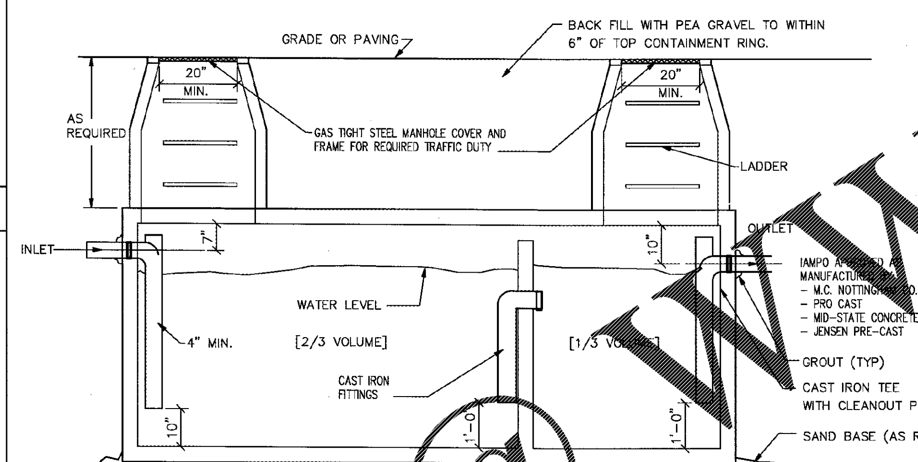


3000 GALLON GREASE INTERCEPTOR REQUIRED.

NOTES
3,000 GAL CAPACITY.
3,000 PSI CONCRETE.

GREASE INTERCEPTOR DETAILS & SPECIFICATIONS — SCALE: N.T.S. — 10

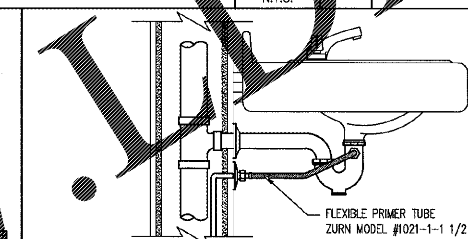


WATER SAVER TRAP PRIMER — SCALE: N.T.S. — 11

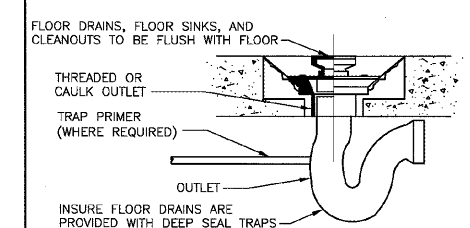


FLOOR DRAIN DETAIL — SCALE: N.T.S. — 12

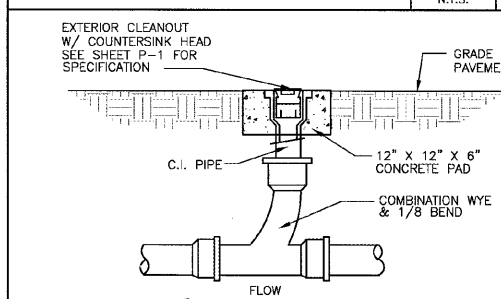


CLEANOUT FINISH GRADE — SCALE: N.T.S. — 13

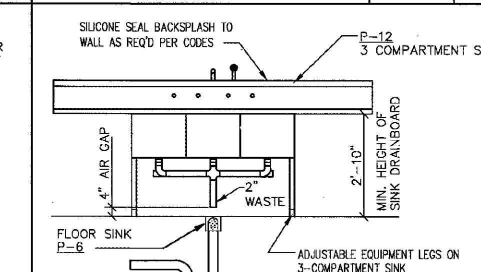


3 COMP. SINK INSTALLATION — SCALE: N.T.S. — 14

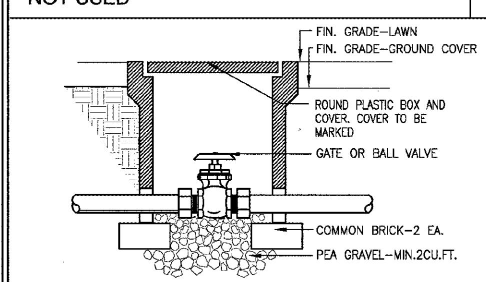


NOTE:
1. FOR GATE VALVES 2" AND SMALLER, USE HANDWHEEL. FOR LARGER THAN 2" SQ. OPERATING NUT.
2. FROST-ZONE MIN. BURIAL DEPTH = 2'-0"

GATE VALVE — SCALE: N.T.S. — 15

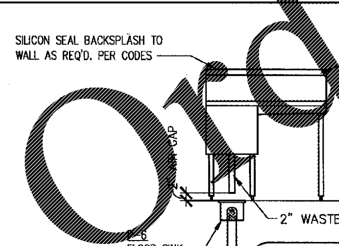


VEG. SINK INSTALLATION — SCALE: N.T.S. — 16

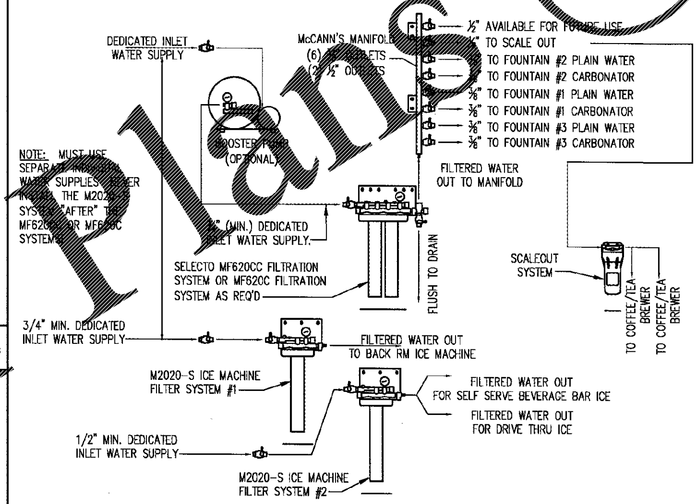


NOTE:
1- ONLY COCA COLA APPROVED BLACK OPAQUE TUBING IS TO BE USED FOR THE INSTALLATION OF THIS SYSTEM
2- GENERAL CONTRACTOR TO NOTIFY CONSTRUCTION PROJECT MANAGER FOR PROPER LOCATION & INSTALLATION OF FILTERS & PIPING. FILTER & PIPING FURNISHED & INSTALLED BY COCA COLA.

FILTERED WATER TO BE RUN BY OTHERS. P.C. SHALL PROVIDE "DROPS" IN WALLS.

WATER FILTER DETAIL — SCALE: N.T.S. — 17

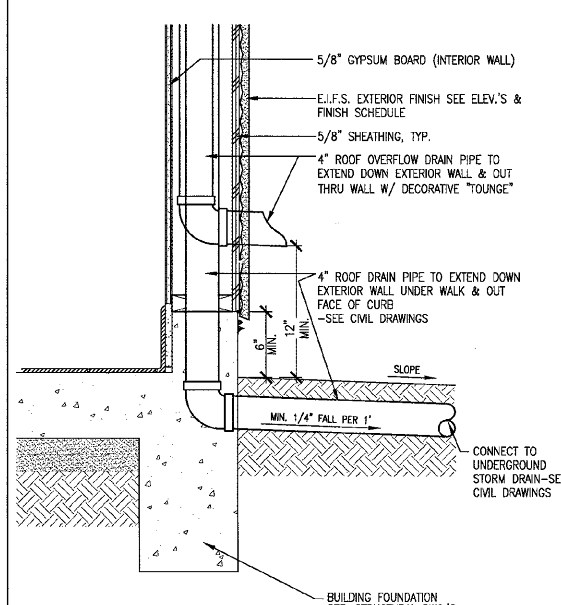


ROOF DRAIN DETAIL — SCALE: 3/8" = 1'-0" — 18

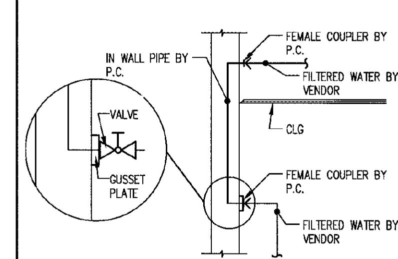


FILTERED WATER "IN WALL DROP" — SCALE: N.T.S. — 19

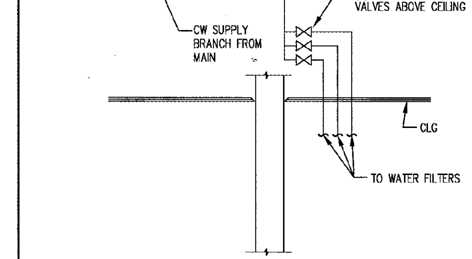


FILTERED WATER SHUTOFF VALVES — SCALE: N.T.S. — 20

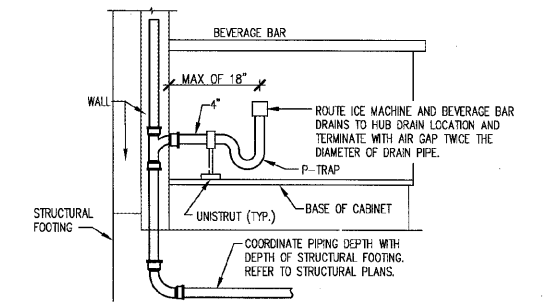


SELF-SERVE BEVERAGE BAR DETAIL — SCALE: N.T.S. — 21

Order Plans @ WWW.LDILine.com

NRD Project # 16399

national restaurant designers
ARCHITECTS & ENGINEERS
3005 CARRINGTON MILL BLVD. SUITE 105
MORRISVILLE, NORTH CAROLINA 27560
ph: 919 544 7251 fax: 919 544 9399
A Division of LMHT Associates

HARDEE'S T24KE PROTOTYPE
143 CHURCH STREET
BATESBURG-LEESVILLE, SOUTH CAROLINA 29054

REVISIONS

| NO. | DESCRIPTION | DATE |
|---|---|---|

PLUMBING DETAILS

| DRAWN BY | CHECKED BY #1 | CHECKED BY #2 | APPROVED BY |
|---|---|---|---|
| JCL | SDS | | NRT |

CKE SITE ID.:

DATE: 2-28-17

SHEET NUMBER: P7