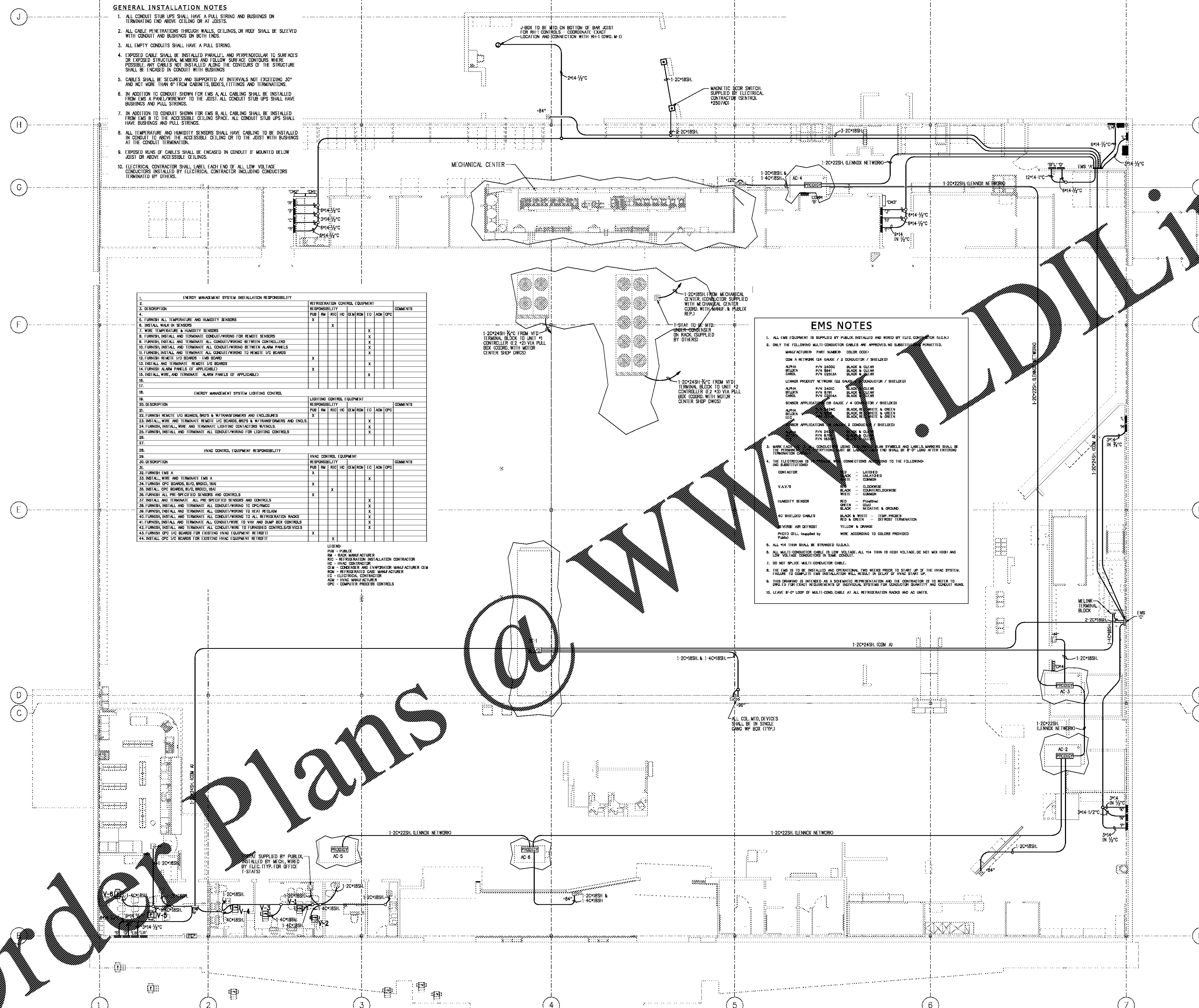

GENERAL INSTALLATION NOTES

1. ALL CONDUIT STUB UPS SHALL HAVE A PULL STRING AND BUSHINGS ON TERMINATING END ABOVE CEILING OR AT JOISTS.
2. ALL CABLE PENETRATIONS THROUGH WALLS, CEILINGS, OR ROOF SHALL BE SLEEVED WITH CONDUIT AND BUSHINGS ON BOTH ENDS.
3. ALL EMPTY CONDUITS SHALL HAVE A PULL STRING.
4. EXPOSED CABLE SHALL BE INSTALLED PARALLEL AND PERPENDICULAR TO SURFACES OR EXPOSED STRUCTURAL MEMBERS AND FOLLOW SURFACE CONTOURS WHERE POSSIBLE. ANY CABLES NOT INSTALLED ALONG THE CONTOURS OF THE STRUCTURE SHALL BE ENCASED IN CONDUIT WITH BUSHINGS
5. CABLES SHALL BE SECURED AND SUPPORTED AT INTERVALS NOT EXCEEDING 30" AND NOT MORE THAN 6" FROM CABINETS, BOXES, FITTINGS AND TERMINATIONS.
6. IN ADDITION TO CONDUIT SHOWN FOR EMS A, ALL CABLING SHALL BE INSTALLED FROM EMS A PANEL/WIREWAY TO THE JOIST. ALL CONDUIT STUB UPS SHALL HAVE BUSHINGS AND PULL STRINGS.
7. IN ADDITION TO CONDUIT SHOWN FOR EMS B, ALL CABLING SHALL BE INSTALLED FROM EMS B TO THE ACCESSIBLE CEILING SPACE. ALL CONDUIT STUB UPS SHALL HAVE BUSHINGS AND PULL STRINGS.
8. ALL TEMPERATURE AND HUMIDITY SENSORS SHALL HAVE CABLING TO BE INSTALLED IN CONDUIT TO ABOVE THE ACCESSIBLE CEILING OR TO THE JOIST WITH BUSHINGS AT THE CONDUIT TERMINATION.
9. EXPOSED RUNS OF CABLES SHALL BE ENCASED IN CONDUIT IF MOUNTED BELOW JOIST OR ABOVE ACCESSIBLE CEILINGS.
10. ELECTRICAL CONTRACTOR SHALL LABEL EACH END OF ALL LOW VOLTAGE CONDUCTORS INSTALLED BY ELECTRICAL CONTRACTOR INCLUDING CONDUCTORS TERMINATED BY OTHERS.

1. ENERGY MANAGEMENT SYSTEM INSTALLATION RESPONSIBILITY										
2.	REFRIGERATION CONTROL EQUIPMENT									
3. DESCRIPTION	RESPONSIBILITY									COMMENTS
4.	PUB	RM	RIC	HC	CEM	RCM	EC	ACM	CPC	
5. FURNISH ALL TEMPERATURE AND HUMIDITY SENSORS	X									
6. INSTALL WALK-IN SENSORS			X							
7. WIRE TEMPERATURE & HUMIDITY SENSORS							X			
8. FURNISH, INSTALL AND TERMINATE CONDUIT/WIRING FOR REMOTE SENSORS							X			
9. FURNISH, INSTALL AND TERMINATE ALL CONDUIT/WIRING BETWEEN CONTROLLERS							X			
10. FURNISH, INSTALL AND TERMINATE ALL CONDUIT/WIRING BETWEEN ALARM PANELS							X			
11. FURNISH, INSTALL AND TERMINATE ALL CONDUIT/WIRING TO REMOTE I/O BOARDS							X			
12. FURNISH REMOTE I/O BOARDS - EMS BOARD	X									
13. INSTALL AND TERMINATE REMOTE I/O BOARDS							X			
14. FURNISH ALARM PANELS (IF APPLICABLE)	X									
15. INSTALL, WIRE, AND TERMINATE ALARM PANELS (IF APPLICABLE)							X			
16.										
17.										
18. ENERGY MANAGEMENT SYSTEM LIGHTING CONTROL										
19.	LIGHTING CONTROL EQUIPMENT									
20. DESCRIPTION	RESPONSIBILITY									COMMENTS
21.	PUB	RM	RIC	HC	CEM	RCM	EC	ACM	CPC	
22. FURNISH REMOTE I/O BOARDS, 8RO'S & W/TRANSFORMERS AND ENCLOSURES	X									
23. INSTALL, WIRE AND TERMINATE REMOTE I/O BOARDS, 8RO'S & W/TRANSFORMERS AND ENCLS.							X			
24. FURNISH, INSTALL, WIRE AND TERMINATE LIGHTING CONTACTORS W/ENCLS.							X			
25. FURNISH, INSTALL AND TERMINATE ALL CONDUIT/WIRING FOR LIGHTING CONTROLS							X			
26.										
27.										
28. HVAC CONTROL EQUIPMENT RESPONSIBILITY										
29.	HVAC CONTROL EQUIPMENT									
30. DESCRIPTION	RESPONSIBILITY									COMMENTS
31.	PUB	RM	RIC	HC	CEM	RCM	EC	ACM	CPC	
32. FURNISH EMS A	X									
33. INSTALL, WIRE AND TERMINATE EMS A							X			
34. FURNISH CPC BOARDS, 8I/O, 8RO(C), 16AI	X									
35. INSTALL CPC BOARDS, 8I/O, 8RO(C), 16AI			X							
36. FURNISH ALL PRE-SPECIFIED SENSORS AND CONTROLS	X									
37. INSTALL AND TERMINATE ALL PRE-SPECIFIED SENSORS AND CONTROLS							X			
38. FURNISH, INSTALL AND TERMINATE ALL CONDUIT/WIRING TO CPC/RMCC							X			
39. FURNISH, INSTALL AND TERMINATE ALL CONDUIT/WIRING TO HEAT RECLAIM							X			
40. FURNISH, INSTALL AND TERMINATE ALL CONDUIT/WIRING TO ALL REFRIGERATION RACKS							X			
41. FURNISH, INSTALL AND TERMINATE ALL CONDUIT/WIRE TO VAV AND DUMP BOX CONTROLS							X			
42. FURNISH, INSTALL AND TERMINATE ALL CONDUIT/WIRE TO FURNISHED CONTROLS/DEVICES							X			
43. FURNISH CPC I/O BOARDS FOR EXISTING HVAC EQUIPMENT RETROFIT	X									
44. INSTALL CPC I/O BOARDS FOR EXISTING HVAC EQUIPMENT RETROFIT			X							

LEGEND:
PUB - PUBLIX
RM - RACK MANUFACTURER
RIC - REFRIGERATION INSTALLATION CONTRACTOR
HC - HVAC CONTRACTOR
CEM - CONDENSER AND EVAPORATOR MANUFACTURER OEM
RCM - REFRIGERATED CASE MANUFACTURER
EC - ELECTRICAL CONTRACTOR
ACM - HVAC MANUFACTURER
CPC - COMPUTER PROCESS CONTROLS

EMS NOTES

1. ALL EMS EQUIPMENT IS SUPPLIED BY PUBLIX. INSTALLED AND WIRED BY ELEC. CONTRACTOR (U.O.N.)
2. ONLY THE FOLLOWING MULTI-CONDUCTOR CABLES ARE APPROVED. NO SUBSTITUTIONS PERMITTED.

   MANUFACTURER: PART NUMBER: COLOR CODE:

   COM A NETWORK (24 GAUGE / 2 CONDUCTOR / SHIELDED)

   ALPHA P/N 2400C BLACK & CLEAR
   BELDEN P/N 8641 BLACK & CLEAR
   CAROL P/N C2513A BLACK & CLEAR

   LENNOX PRODIGY NETWORK (22 GAUGE / 2 CONDUCTOR / SHIELDED)

   ALPHA P/N 2401C BLACK & CLEAR
   BELDEN P/N 8761 BLACK & CLEAR
   CAROL P/N C2514A BLACK & CLEAR

   SENSOR APPLICATIONS (18 GAUGE / 4 CONDUCTOR / SHIELDED)

   ALPHA P/N 2424C BLACK, RED, WHITE & GREEN
   BELDEN [illegible] BLACK, RED, WHITE & GREEN
   EEC [illegible] BLACK, RED, WHITE & GREEN

   SENSOR APPLICATIONS [illegible] 2 CONDUCTOR / SHIELDED)

   [illegible] P/N 242[illegible] BLACK & CLEAR
   [illegible] P/N 876[illegible] BLACK & CLEAR
   [illegible] P/N 1830[illegible] BLACK & CLEAR

3. MARK EACH [illegible] ALL CONDUCTORS USING [illegible] PLAN SYMBOLS AND LABELS. MARKERS SHALL BE THE PERMANENT [illegible] EVERYTHING MUST BE LABELED [illegible] END SHALL BE 8'-0" LONG AFTER ENTERING TERMINATION CABINET.
4. THE ELECTRICIAN IS TO PROVIDE WIRE CONNECTIONS ACCORDING TO THE FOLLOWING: (NO SUBSTITUTIONS)

   CONTACTOR: RED - LATCHED; BLACK - UNLATCHED; WHITE - COMMON
   V.A.V.'S: RED - CLOCKWISE; BLACK - COUNTERCLOCKWISE; WHITE - COMMON
   HUMIDITY SENSOR: RED - P(ositive); GREEN - O(ut); BLACK - NEGATIVE & GROUND
   4C SHIELDED CABLES: BLACK & WHITE - TEMP. PROBES; RED & GREEN - DEFROST TERMINATION
   REVERSE AIR DEFROST: YELLOW & ORANGE
   PHOTO CELL (supplied by Publix): WIRE ACCORDING TO COLORS PROVIDED

5. ALL #14 THHN SHALL BE STRANDED (U.O.N.).
6. ALL MULTI-CONDUCTOR CABLE IS LOW VOLTAGE. ALL #14 THHN IS HIGH VOLTAGE. DO NOT MIX HIGH AND LOW VOLTAGE CONDUCTORS IN SAME CONDUIT.
7. DO NOT SPLICE MULTI-CONDUCTOR CABLE.
8. THE EMS IS TO BE INSTALLED AND OPERATIONAL TWO WEEKS PRIOR TO START UP OF THE HVAC SYSTEM. FAILURE TO COMPLETE EMS INSTALLATION WILL RESULT IN DELAY OF HVAC START UP.
9. THIS DRAWING IS INTENDED AS A SCHEMATIC REPRESENTATION AND THE CONTRACTOR IS TO REFER TO DWG. E5 FOR EXACT REQUIREMENTS OF INDIVIDUAL SYSTEMS FOR CONDUCTOR QUANTITY AND CONDUIT RUNS.
10. LEAVE 8'-0" LOOP OF MULTI-COND. CABLE AT ALL REFRIGERATION RACKS AND AC UNITS.

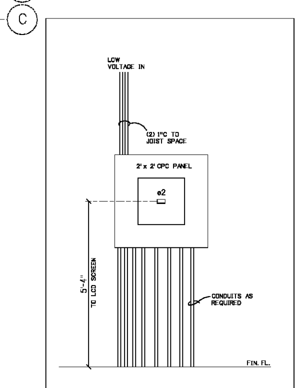

EMS 'A'

Publix. SUPER MARKETS

CORPORATE OFFICES, FACILITIES DESIGN
BOX 407, LAKELAND, FL 33802
(863) 680-5295
PHYSICAL ADDRESS:
3300 PUBLIX CORPORATE PARKWAY
LAKELAND, FL 33811-3311

PUBLIX FACILITIES DESIGN DEPARTMENT
DAVID [illegible]BEE, AIA
ARCHITECT [illegible] 91318
DAVID [illegible]
ARCHITECT - FL. REG. [illegible]
JOHN [illegible], PE
CIVIL/STRUCTURAL - FL. REG. 45277 GA. REG. 020251 SC. REG. 16340 AL. REG. 20382 TN. REG. 101507
PAUL C. HARMAN, PE
STRUCTURAL - FL. REG. 51959 GA. REG. 27740 SC. REG. 21754 AL. REG. 24906 TN. REG. 107882 NC. REG. 39673 VA. REG. 0402055022
JOHN J. CARAMALIS, PE
MECHANICAL - FL. REG. 43889 GA. REG. 021246 SC. REG. 16521 AL. REG. 20581 TN. REG. 108507 VA. REG. 0402055478
ANTHONY CLEMENTI, PE
MECHANICAL - FL. REG. 54781 GA. REG. 31882 SC. REG. 25591 AL. REG. 28469 TN. REG. 111382 NC. REG. 039664 VA. REG. 0402056137
RAYMOND J. SIRIANNI, PE
ELECTRICAL - FL. REG. 54085 GA. REG. 025636 SC. REG. 19743 AL. REG. 23065 TN. REG. 108038 NC. REG. 039963 VA. REG. 0402055379
NORMAN MEIER, PE
ELECTRICAL - FL. REG. 59422 GA. REG. 31492 SC. REG. 25290 AL. REG. 28079

© COPYRIGHT 2017
PUBLIX SUPER MARKETS, INC.

THESE CONSTRUCTION DOCUMENTS ARE THE PROPERTY OF PUBLIX SUPER MARKETS, INC. AND ARE NOT TO BE COPIED OR REUSED FOR ANY SPECIFIC BUILDING WITHOUT WRITTEN PERMISSION. THESE DRAWINGS SHALL NOT BE DUPLICATED WITHOUT PRIOR WRITTEN PERMISSION OF PUBLIX SUPER MARKETS, INC.

THE DESIGN INDICATED IN THESE CONSTRUCTION DOCUMENTS DOES, TO THE BEST OF MY KNOWLEDGE, INFORMATION, AND BELIEF, COMPLY WITH THE APPLICABLE MINIMUM BUILDING CODES

PLOT DATE: 25 AUG 2017

REVISION DATA:

1637
PUBLIX @ LAKE CROSSING

PLATT SPRINGS RD & HWY 6
LEXINGTON, LEXINGTON, SC

45.9.2
V0807-2017
SIENNA - LITE

ELECTRICAL EMS PLAN

SCALE: 1/8" = 1'-0"

E-8

Order Plans @ WWW.LDILine.com