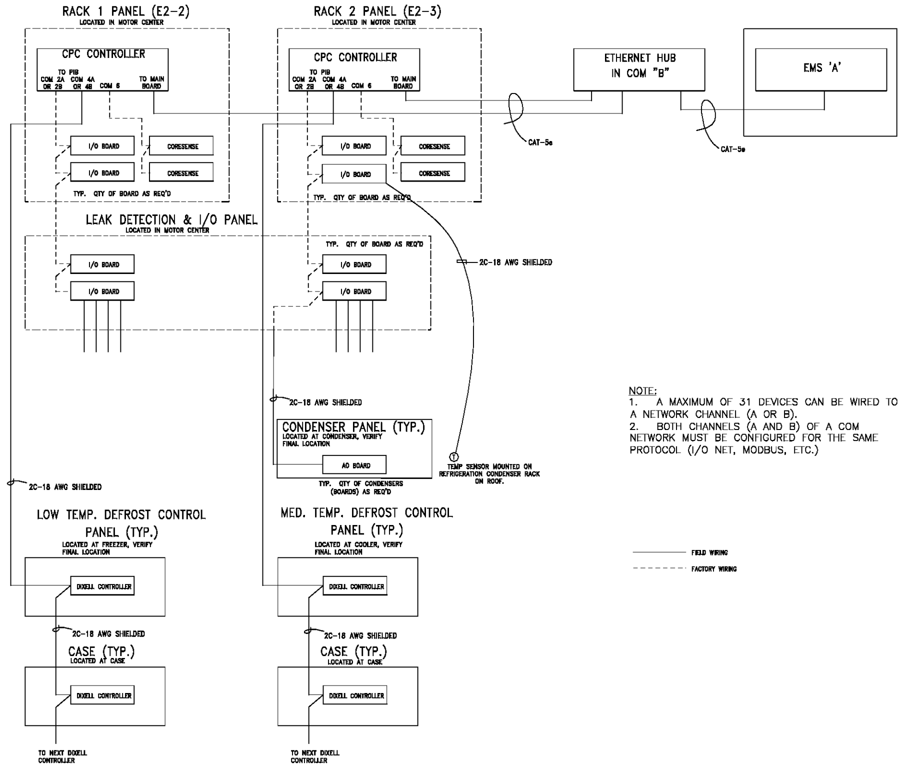

NOTE:
1. A MAXIMUM OF 31 DEVICES CAN BE WIRED TO A NETWORK CHANNEL (A OR B).
2. BOTH CHANNELS (A AND B) OF A COM NETWORK MUST BE CONFIGURED FOR THE SAME PROTOCOL (I/O NET, MODBUS, ETC.)

1 GENERAL NETWORK WIRING DIA.
N.T.S.

COOLER/FREEZER POWER DIAGRAM

APPLIES TO ALL COOLERS & FREEZERS:

1. INSTALL 208/1 CIRCUIT FROM RESPECTIVE PANELBOARD PER PLAN (SEE DWG. E-3.1). SEE FRZR/CLR LIGHTING CONTROL WIRING DETAIL, THIS SHEET.
2. DEFROST CONTROL PANEL SUPPLIED BY OTHERS, INSTALLED BY ELECTRICAL. INSTALL ABOVE STRIKE SIDE OF CLR/FRZR DOOR WITHIN 12" OF MAGNETIC SWITCH.
3. 2#10 FOR ELEC. DEFROST; 2#12 FOR EVAP. FANS; 2#12 FOR LIGHTING AND 1#10(EG) IN 1"C FROM OUTPUT OF CONTACTORS TO BELL BOX.
4. CONTRACTOR TO PROVIDE AND INSTALL 1" LB OUTSIDE OF COOLER/FREEZER AND INTERCONNECT WITH COOLER WALL MANUFACTURER INSTALLED J-BOX USING FIELD ASSEMBLED 1" SCH.40 PVC THREADED NIPPLE.
5. ELECTRICAL CONTRACTOR SHALL ENSURE ALL PENETRATIONS TO COOLERS AND FREEZERS INCURRED AS A RESULT OF ANY ELECTRICAL WORK SHALL BE SEALED WITH ENERFOAM24 EXPANDING URETHANE FOAM BY DOW PER NEC 300.7(A).
   - a.) SEAL-OFF MATERIAL SHALL BE INJECTED TO FILL ENTIRE NIPPLE SLEEVE.
   - b.) SEAL-OFF MATERIAL SHALL BE INJECTED TO ENSURE ADEQUATE FILL OF CONDUIT (APPROX. 6").
6. BELL BOX BY COOLER/FREEZER MANUFACTURER.
7. #10s; #12s & #10 EG-1" C TO RESPECTIVE DISC. SW.s PER NOTE 8. COORD. WITH SPECIFIC FREEZER OR COOLER FOR EXACT REQUIREMENTS, DWG. E-3.1.
8. ELECTRICAL CONTRACTOR TO PROVIDE & INSTALL (1) WEATHER PROOF BELL BOX (SEE FREEZER/COOLER DISC. SW. ASSEMBLY DETAIL, THIS SHEET) INSIDE EACH COOLER/FREEZER AT CEILING FOR FAN (ALL CLR AND FRZR.s) AND DEFROST POWER (ALL FRZR.s, MEAT AND CHICKEN CLR.s). LOCATE BEHIND RIGHT REAR OF EACH COIL AT 6" FROM WALL. INTERCONNECT BELL BOXES IN FREEZERS/COOLERS WITH MULTIPLE COILS.
9. 2#10; 2#12 & 1#10(EG) IN ¾" SEAL-TITE TO RESPECTIVE REFRIG. COIL DEVICES. 2#10 FOR ELEC. DEFROST. 2#12 FOR FANS.
10. TYP. CLR/FRZR LUMINAIRE. SECURE MANUFACTURER PROVIDED U-CLAMP WITH #10 SS THRU BOLT PER MANUFACTURER INSTRUCTIONS. (2) FOR 2' AND 4' LENGTH LUMINAIRES; (3) FOR 8' LENGTH LUMINAIRES.
11. LIGHT SWITCH BY ELECTRICAL CONTRACTOR.
12. 3#12-1/2"C FROM PANEL OR PREVIOUS FREEZER FOR CONDENSATE DRAIN HEAT TRACE. COORD. WITH DWG. E-3.1
13. PROVIDE J-BOX ON TOP OF COOLER FOR CONDENSATE DRAIN HEAT TRACE POWER. SEE FREEZER HEAT TRACE WIRING DETAIL, THIS SHEET FOR ADDITIONAL REQUIREMENTS.
14. 3#12-¾"C TO LUMINAIRE(S) VIA LIGHT SWITCH PER NOTE 11. COORD. WITH E-3.1

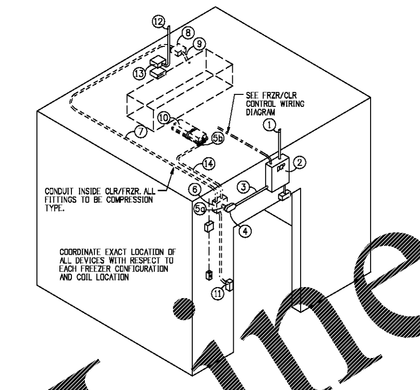

2 TYP. COOLER/FREEZER POWER DIAGRAM
N.T.S.

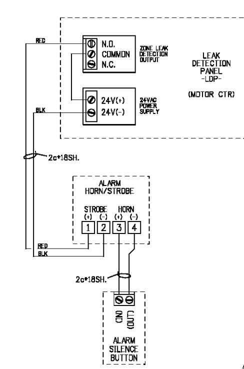

3 ALARM WIRING DIAGRAM
N.T.S.

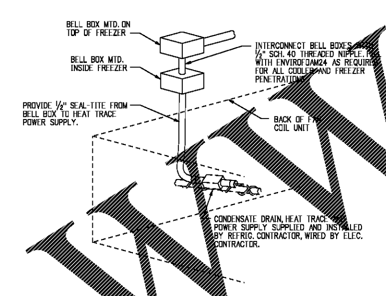

4 FRZR HEAT TRACE WIRING
N.T.S.

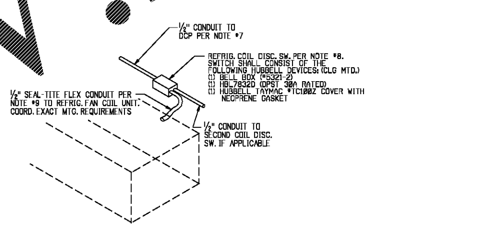

5 TYP. COOLER FAN COIL DISC. SW. (NO ELEC. DEFROST)
N.T.S.

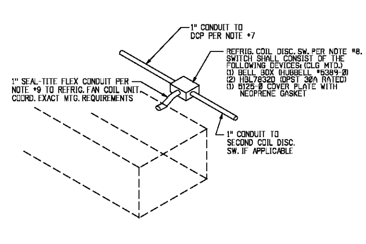

6 TYP. FREEZER, MEAT & CHICKEN COOLER DISC. SW. (W/ELEC. DEFROST)
N.T.S.

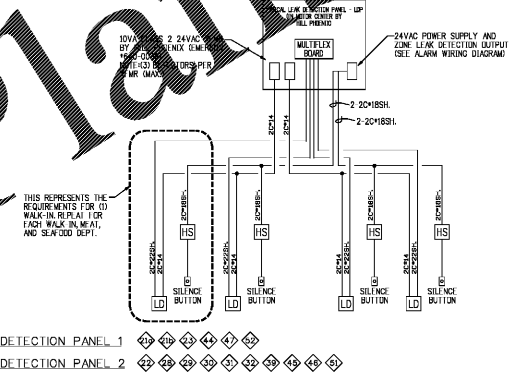

LEAK DETECTION PANEL 1 21a 21b 23 44 47 52
LEAK DETECTION PANEL 2 22 28 29 30 31 32 39 45 46 51

7 LEAK DETECTION SYSTEM WIRING DIAGRAM (TYP.)
N.T.S.

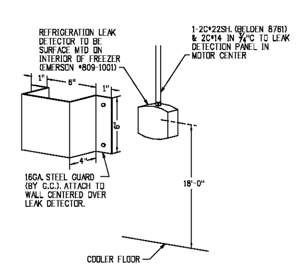

8 REFRIGERATION LEAK DETECTOR MTG.
N.T.S.

COOLER/FREEZER CONTROLS DIAGRAM

APPLIES TO ALL COOLERS & FREEZERS:

1. NETWORK LOOP CONSISTING OF 2C#18SH. FROM RESPECTIVE RACK CONTROLLER OR ADJACENT CONTROL BOARD. COORD. WITH DWG. E-3.1a FOR SPECIFIC NETWORK LOOP AND ROUTING. CONDUCTORS SHALL BE PROPERLY SUPPORTED AND SECURED.
2. DEFROST CONTROL PANEL SUPPLIED BY OTHERS, INSTALLED BY ELECTRICAL. INSTALL ABOVE STRIKE SIDE OF CLR/FRZR DOOR WITHIN 12" OF MAGNETIC SWITCH.
3. 1" CONDUIT FOR CONTROL CONDUCTORS TO BELL BOX ON TOP OF FREEZER OR COOLER. COORD. WITH DWG. E-3.1a FOR SPECIFIC CONTROL DEVICE QTY.s AND REQUIREMENTS.
4. CONTRACTOR TO PROVIDE AND INSTALL BELL BOX (HUBBELL #5389-0) WITH BLANK COVER ON TOP OF COOLER/FREEZER AND INTERCONNECT WITH BELL BOX (HUBBELL #5389-0) MTD. TO CEILING INSIDE FREEZER OR COOLER USING FIELD ASSEMBLED 1" SCH.40 PVC THREADED NIPPLE.
5. ELECTRICAL CONTRACTOR SHALL ENSURE ALL PENETRATIONS TO COOLERS AND FREEZERS INCURRED AS A RESULT OF ANY ELECTRICAL WORK SHALL BE SEALED WITH ENERFOAM24 EXPANDING URETHANE FOAM BY DOW PER NEC 300.7(A).
   - a.) SEAL-OFF MATERIAL SHALL BE INJECTED TO FILL ENTIRE NIPPLE SLEEVE.
   - b.) SEAL-OFF MATERIAL SHALL BE INJECTED TO ENSURE ADEQUATE FILL OF CONDUIT (APPROX. 6").
6. MAGNETIC DOOR SWITCH. SUPPLIED AND INSTALLED BY REFRIG. CONTRACTOR, WIRED BY ELEC.
7. 2C#18SH. TO DOOR SWITCH. CONNECT SWITCH IN SERIES FOR FREEZERS OR COOLERS WITH MULTIPLE DOORS (EXCLUDING BI-SWING DOORS, ie. DURASS DOORS)
8. 1-2C#22SH. (BELDEN #8761) & 2C#14 TO RESPECTIVE LEAK DETECTION PANEL IN MOTOR CENTER OR LEAK DETECTOR IN ADJACENT FRZR. SEE LEAK DETECTION SYSTEM WIRING DIA. ON DWG. E-3.1a (RUN ¾"C INSIDE FREEZER/COOLER)
9. REFRIG. LEAK DETECTOR (LD) (EMERSON #809-1001, FURNISHED BY OWNER) TO BE MTD. 5'-0" A.F.F. BELOW A SINGLE COIL OR BETWEEN DUAL COILS (SEE MTG DETAIL, THIS SHEET)
10. 1-2C#18SH. TO RESPECTIVE LEAK DETECTION PANEL IN MOTOR CENTER. SEE LEAK DETECTION WIRING DIA. ON DWG. E-3.1a
11. ALARM HORN STROBE (HS) (EMC/RLI-24VAC-METAL-STD) MTD ON STRIKE SIDE OF DOOR (SEE ALARM WIRING DIA. ON DWG. E-3.1a)
12. ALARM HORN SILENCE BUTTON (EMC/RSB-24VAC-METAL-STD) MTD ON STRIKE SIDE OF DOOR (SEE ALARM WIRING DIA. ON DWG. E-3.1a)
13. 1-2C#18SH. FROM RESPECTIVE LEAK DETECTION HORN STROBE. SEE ALARM WIRING DIA. ON DWG. E-3.1a

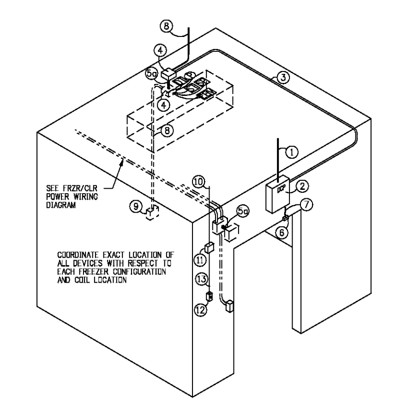

9 TYP. COOLER/FREEZER CONTROLS DIAGRAM
N.T.S.

Publix. SUPER MARKETS
CORPORATE OFFICES, FACILITIES DESIGN
BOX 407, LAKELAND, FL 33802
(863) 680-5295
PHYSICAL ADDRESS:
3300 PUBLIX CORPORATE PARKWAY
LAKELAND, FL 33811-3311
PUBLIX FACILITIES DESIGN DEPARTMENT
DAVID SAULBEE, AIA
ARCHITECT - FL. REG. 91318
DAVID RUHL
ARCHITECT - FL. REG. ...57 GA. REG. ...81 SC. REG. ...77 AL. REG. ...84 TN. REG. ...497 NC. REG. ...432 VA. REG. 0401017097
JOHN ... STEPHENS, PE
CIVIL/STRUCTURAL - FL. REG. 45277 GA. REG. 020251 SC. REG. 16340 AL. REG. 20382 TN. REG. 101507
PAUL C. HARMAN, PE
STRUCTURAL - FL. REG. 51959 GA. REG. 27740 SC. REG. 21754 AL. REG. 24905 TN. REG. 107882 NC. REG. 39673 VA. REG. 0402055022
JOHN J. CARAMALIS, PE
MECHANICAL - FL. REG. 43889 GA. REG. 021246 SC. REG. 16521 AL. REG. 20581 TN. REG. 108507 VA. REG. 0402055478
ANTHONY CLEMENTI, PE
MECHANICAL - FL. REG. 54781 GA. REG. 31882 SC. REG. 25591 AL. REG. 28469 TN. REG. 111382 NC. REG. 039664 VA. REG. 0402056137
RAYMOND J. SIRIANNI, PE
ELECTRICAL - FL. REG. 54085 GA. REG. 025636 SC. REG. 19743 AL. REG. 23065 TN. REG. 108038 NC. REG. 039963 VA. REG. 0402055379
NORMAN MEIER, PE
ELECTRICAL - FL. REG. 59422 GA. REG. 31492 SC. REG. 25290 AL. REG. 28079

© COPYRIGHT 2017 PUBLIX SUPER MARKETS, INC.
THESE CONSTRUCTION DOCUMENTS ARE THE PROPERTY OF PUBLIX SUPER MARKETS, INC. AND ARE NOT TO BE COPIED OR REUSED FOR ANY SPECIFIC BUILDING WITHOUT WRITTEN PERMISSION. THESE DRAWINGS SHALL NOT BE DUPLICATED WITHOUT PRIOR WRITTEN PERMISSION OF PUBLIX SUPER MARKETS, INC.
THE DESIGN INDICATED IN THESE CONSTRUCTION DOCUMENTS DOES, TO THE BEST OF MY KNOWLEDGE, INFORMATION, AND BELIEF, COMPLY WITH THE APPLICABLE MINIMUM BUILDING CODES

PLOT DATE: 25 AUG 2017

REVISION DATA:

1637
PUBLIX @ LAKE CROSSING
PLATT SPRINGS RD & HWY 6
LEXINGTON, LEXINGTON, SC

45.9.2
V0807-2017
SIENNA - LITE

ELECTRICAL REFRIGERATION DETAILS

SCALE: 1/8" = 1'-0"

E-4b

Order Plans @ www.LDILine.com