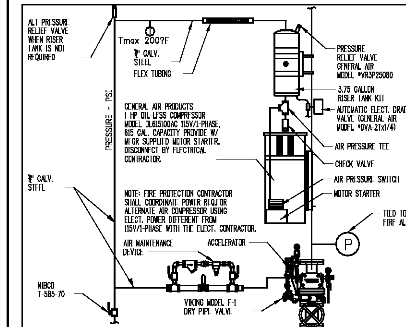

1 FP-3 DRY PIPE COMPRESSOR SCHEMATIC

SCALE: N.T.S. DRY PIPE SYSTEM DESIGN CONDITION WITH A 7.46 CFM, 50 PSI, AND 615 GALLON MAX CAPACITY

NOTE:

THE SYSTEM SHOWN IN THIS DETAIL IS CONSIDERED THE WORST CASE DESIGN AND IS DEPENDENT ON THE FRONT CANOPY SPRINKLER SYSTEM. THE F.P. CONTRACTOR SHALL DETERMINE REQUIREMENTS FOR THIS ZONE AND REVISE THE DRY PIPE SYSTEM AS NECESSARY. PROVIDE FP SUBMITTAL WITH CHANGES TO E.O.R. FOR APPROVAL.

COMPRESSOR AND AIR TANK SHALL BE MOUNTED WITH U-BOLTS TO THE DRY PIPE RISER

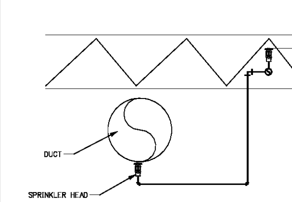

2 FP-3 HVAC DUCT OVER 48 INCH WIDE

SCALE: N.T.S.

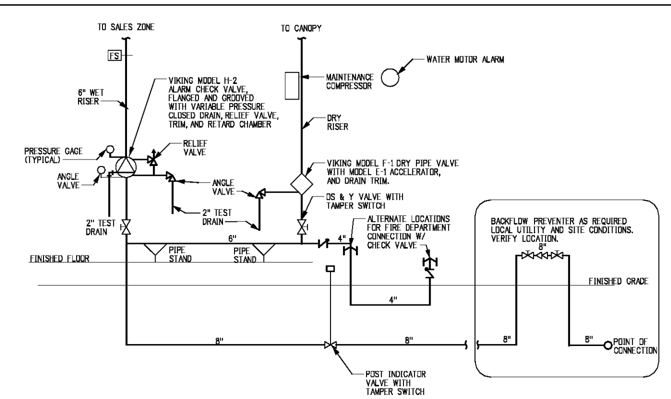

3 FP-3 RISER MANIFOLD SCHEMATIC

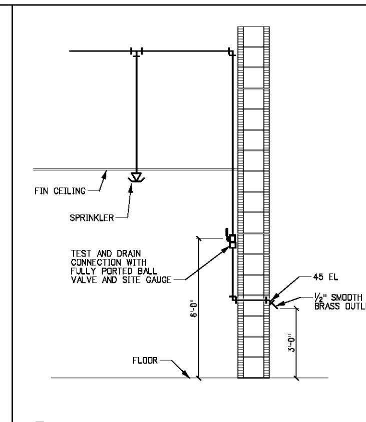

4 FP-3 INSPECTOR'S TEST PIPE

SCALE: N.T.S.

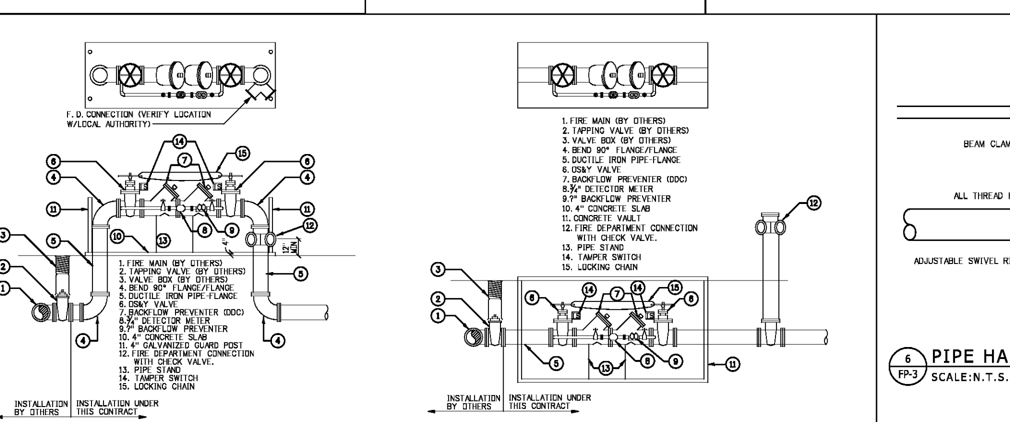

5 FP-3 BACKFLOW PREVENTER DETAIL

SCALE: N.T.S.

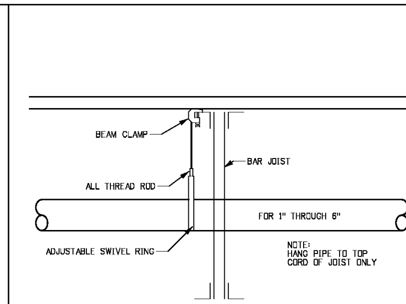

6 FP-3 PIPE HANGER DETAIL

SCALE:N.T.S.

BEAM CLAMP: ⅜" FOR PIPE SIZES UP TO 4"
½" FOR PIPE SIZES UP TO 8"

ALL THREAD ROD: ⅜" FOR PIPE SIZES UP TO 4"
½" FOR PIPE SIZES UP TO 8"

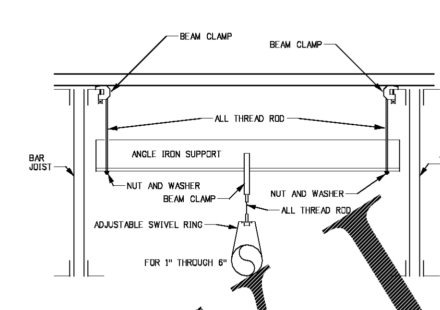

7 FP-3 TRAPEZE HANGER DETAIL

SCALE: N.T.S.

BEAM CLAMP: ⅜" FOR PIPE SIZES UP TO 4"
½" FOR PIPE SIZES UP TO 8"

ALL THREAD ROD: ⅜" FOR PIPE SIZES UP TO 4"
½" FOR PIPE SIZES UP TO 8"

F RATING - 2 - 3 HR.
T RATING - 0 HR.

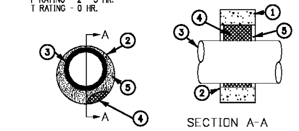

8 FP-3 PENETRATION FIRESTOP DETAIL DESIGN No. CAJ-1081

SCALE: N.T.S.

1. Floor or Wall Assembly Min 3-3/4 in. (2-Hr Rating) or min 4-1/2 in. (3-Hr Rating) thick reinforced lightweight or normal weight (100-150 pcf) concrete floor, or min 4-3/4 in. (2-Hr Rating) or min 5 in. (3-Hr Rating) thick reinforced lightweight or normal weight (100-150 pcf) concrete wall. Wall may also be constructed of any UL Classified Concrete Blocks*. Max diam of opening is 16 in.

See Concrete Block (CAZT) category in the Fire Resistance Directory for names of manufacturers.

2. Metallic Sleeve (Optional) 15/32 Nom 16 in. diam (or smaller) steel pipe, conduit or steel EMT cast or grouted into floor or wall assembly, flush with floor or wall surfaces.

3. Through Penetrants One metallic pipe, conduit or tubing to be installed either concentrically or eccentrically within the firestop system. Pipe, conduit or tubing to be rigidly supported on both sides of floor or wall assembly. The following types and sizes of metallic pipes, conduits or tubing may be used:

A. Steel Pipe Nom 10 in. diam (or smaller) Schedule 10 (or heavier) steel pipe. The annular space shall be min 1/4 in. to max 4 in.

B. Steel Pipe Nom 24 in. diam (or smaller) Schedule 10 (or heavier) steel pipe. The annular space shall be min 1/4 in. to max 1-15/16 in.

C. Conduit Nom 6 in. diam (or smaller) steel conduit or nom 4 in. diam (or smaller) electrical metallic tubing. The annular shall be min 1/4 in. to max 4 in.

D. Copper Tubing Nom 6 in. diam (or smaller) Type M (or heavier) copper tubing. The annular space shall be min 1/4 in. to max 1-13/16 in.

E. Copper Tubing Nom 4 in. (or smaller) Type M (or heavier) copper tubing. The annular space shall be a min 1/4 in. to max 4 in.

4. Forming Material* Min 2-3/4 in. (2-Hr Rating) or min 3 in. (3-Hr Rating) thickness of min 3.5 pcf mineral fiber insulation firmly packed into opening as a permanent form. Forming material to be recessed from top surface of floor or from both surfaces of wall as required to accommodate the required thickness of fill material.

THERMAFIBER L L C - Type SAF

5. Fill, Void or Cavity Material* - Sealant Min 1 in. thickness of fill material applied within the annulus, flush with top surface of floor or with both surfaces of wall. Dry mix material mixed with water at a rate of 2.1 parts dry mix to 1 part water by weight in accordance with the accompanying installation instructions.

UNITED STATES GYPSUM CO - Type FC

5A. Fill, Void or Cavity Material* Not Shown 15/32 Two component fill material used as an alternate to Item 5. Min 1 in. thickness of fill material applied within the annulus, flush with top side of floor or both surfaces of wall. Ready-mixed component mixed with accelerator component at a rate of 66 parts of ready-mixed component to 1 part accelerator component by weight in accordance with the accompanying installation instructions.

UNITED STATES GYPSUM CO - Type RFC
*Bearing the UL Classification Mark

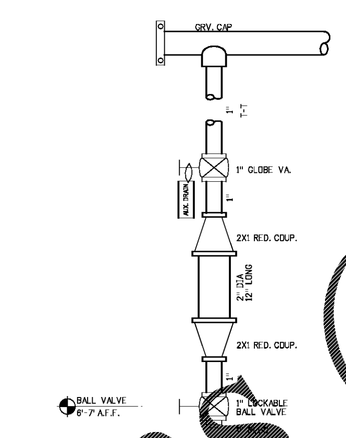

9 FP-3 AUX. DRAIN DETAIL (DRY SYSTEM)

SCALE: N.T.S.

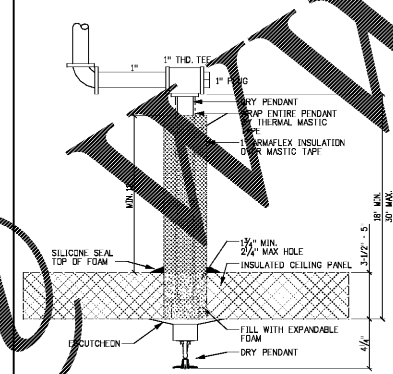

10 FP-3 DRY PENDANT INSTALLATION DETAIL

SCALE: N.T.S.

STEEL PIPE HANGER LOCATION DETAIL			
PIPE SIZE	A	B	C
1"	3'-0" MAX	12'-0" MAX	3" MIN
1¼"	4'-0" MAX	12'-0" MAX	3" MIN
1½"- 8"	5'-0" MAX	12'-0" MAX	3" MIN

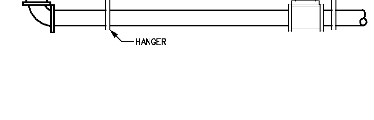

11 FP-3 PIPE HANGER SCHEDULE

SCALE: N.T.S.

AREAS OF HORIZONTAL RUNS BY TRADES

ELECTRICAL: TOP OF STEEL GIRDER AND JOIST TO 32 IN. BELOW TOP OF STEEL; WHERE EXPOSED IN PROTOTYPE, IMMEDIATELY BENEATH TOP OF JOIST MEMBER AND PASSING BETWEEN STEEL JOIST WEBBING. THE INSTALLATION SHALL BE IN COMPLIANCE WITH NEC 300.4(E)

REFRIGERATION: 32 IN. TO 36 IN. BELOW ROOF DECK; WHERE EXPOSED IN PROTOTYPE, IMMEDIATELY BELOW BOTTOM CHORD OF STEEL JOIST GIRDERS AND JOISTS.

FIRE SPRINKLER: 8 IN. ABOVE CEILING; WHERE EXPOSED IN PROTOTYPE, 8 IN ABOVE BOTTOM CHORD OF STEEL GIRDER JOISTS AND JOISTS.

AIR CONDITIONING: 36 IN. BELOW ROOF DECK TO 10 IN. ABOVE CEILING; WHERE EXPOSED IN PROTOTYPE, HANG AS CLOSE UNDER BOTTOM CHORD OF STEEL JOIST GIRDERS AND JOISTS AS POSSIBLE WHILE LEAVING ROOM FOR REFRIGERATION LINES.

IF DEVIATION FROM THESE AREAS IS INDICATED, SUCH DEVIATION MUST BE AGREED UPON BY JOB SUPERINTENDENT AND PUBLIX REPRESENTATIVE.

FIRE PROTECTION LEGEND

SYMBOL	COUNT	SPARES	NAME	METAL	TEMP	K	NPT	ORIFICE	MFGR	SIN#	ESCUT	SPACING
⊛	1	1	PEND	WHITE POLY. COATED BRASS	175	5.6	1/2"	1/2"	VIKING	VK102	SEMI-REC. W/D-1 GUARD	VARIES PER CALCS
◉	2	1	PEND	CHROME	286	5.6	1/2"	1/2"	VIKING	VK102	SEMI-REC.	
•	87	3	PEND	CHROME	155	5.6	1/2"	1/2"	VIKING	STD-VK102	SEMI-REC.	
⊘	34	3	DRY PEND	CHROME	175	5.6	1"	1/2"	VIKING	VK154	STANDARD	
○	339	6	UPRIGHT	BRASS	155	8.0	3/4"	17/32"	VIKING	VK-200	-	
○/○s	94/10	6	UPRIGHT SPRIG	BRASS	155	11.2	3/4"	5/8"	VIKING	VK-530	S- DEPICTS SPRIGG	
○	12	4	UPRIGHT	WHITE POLY. COATED BRASS	155	8.0	3/4"	17/32"	VIKING	VK-200	-	
•	0	0	WET PEND DRY PEND	WHITE POLY. COATED BRASS	155	8.0	3/4"	17/32"	VIKING	VK202 VK163	SEMI-REC.	
•	11	2	WET PEND	WHITE POLY. COATED BRASS	155	5.6	1/2"	1/2"	VIKING	VK102	SEMI-REC.	
▼	0	0	SIDEWALL	WHITE POLY. COATED BRASS	155	5.6	1/2"	1/2"	VIKING	QR-VK305	STANDARD	
▽	0	0	DRY HORZ. SIDEWALL	WHITE POLY. COATED BRASS	155	5.6	1"	1/2"	VIKING	VK252	STANDARD	
○s	9	1	UPRIGHT	BRASS	155	8.0	3/4"	11/32"	VIKING	VK200	1 1/2" SPRIG	
•QR	16	3	PEND	CHROME	155	5.6	1/2"	1/2"	VIKING	QR-VK302	SEMI-REC.	
	FIRE DEPARTMENT CONNECTION											
●	SPRINKLER RISER											
─‖	FLUSHING CONNECTION											

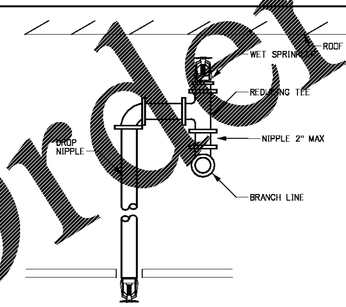

12 FP-3 CONCEALED SPACE AND BELOW CEILING SPRINKLER HEAD DETAIL

SCALE: N.T.S.

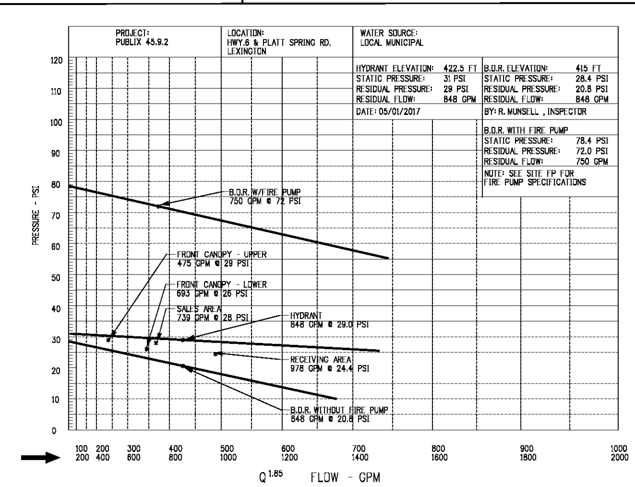

WATER SUPPLY GRAPH

FOR FIRE PUMP PERFORMANCE AND LAYOUT SEE SITE ARCHITECTURAL PLANS

1. PUBLIX 45.9.2 PROTOTYPE.

2. ENGINEERING REQUIREMENT AND FAC 61G15-32 REQUIREMENTS

THIS NEW SINGLE STORY CONCRETE BLOCK BUILDING, WITH STEEL FRAMING, WILL SUPPORT GROCERY MERCANTILE OPERATIONS. THE BUILDING HAS AN OPEN CEILING STRUCTURE WITH LAY-IN ACOUSTICAL TILE OR GYPSUM BOARD CEILINGS IN THE ADMINISTRATIVE, WORK, AND RESTROOM AREAS. THE STRUCTURE IS PROTECTED BY A WET-PIPE SPRINKLER SYSTEM WITH DRY PENDENT DROPS TO COLD SECTIONS AND A FIRE ALARM WARNING SYSTEM. FOR AREAS NORTH OF FLORIDA STATE ROAD 60 THE LOADING DOCK AND FRONT CANOPY WILL HAVE A DRY-PIPE SPRINKLER SYSTEM.

THE SPRINKLE SYSTEM INCLUDED A DOUBLE CHECK DETECTOR ASSEMBLY WITH TAMPER SWITCHES ON BOTH OS&Y ISOLATION VALVES, AND MEETS THE REQUIREMENTS OF THE LOCAL WATER SURVEYOR. SEE THE PROJECT SPECIFICATIONS SECTION 2100.00 IN THE "PM" NUMBERED SHEETS IN THIS SET OF CONSTRUCTION DOCUMENTS. MAXIMUM BUILDING PRESSURE DROP: 6 PSI

THE WET PIPE SYSTEM WILL FEED WATER TO A HYDRAULICALLY DESIGN GRIDDED PIPE NETWORK WITH A 6" MAIN AND 4" CROSS MAIN, CONNECTED BY 2" BRANCH PIPES. THE 6" MAIN PIPE RECEIVES WATER FROM A 6" SYSTEM RISER, CONTAINING AN OS&Y MAIN CONTROL VALVE WITH TAMPER SWITCHES AND AN ALARM CHECK VALVE WITH A MAIN DRAIN VALVE, RETARD CHAMBER, AND RELIEF VALVE. IN FREEZING CLIMATES THE RISER IS HOUSED WITHIN AN OUTSIDE RISER CLOSET.

THE DRY TYPE SPRINKLER SYSTEM, IF INSTALLED ON THIS PROJECT, WILL FEED WATER TO SPRINKLERS ATTACHED TO A NETWORK OF GALVANIZED STEEL PIPE AND GALVANIZED FITTINGS. WATER IS FED INTO THE PIPE NETWORK THROUGH A DRY PIPE VALVE FROM THE 6" FIRE RISER HEADER IN THE FIRE RISER ROOM ADJACENT TO THE REAR WALL OF THE BUILDING. AN APPROPRIATE SIZED RISER MOUNTED AIR COMPRESSOR, AIR MAINTENANCE DEVICE, AND 3 GALLON-RISER MOUNTED AIR STORAGE TANK, IF NEEDED, SHALL BE INSTALLED TO PRESSURE THE SYSTEM.

THE SPRINKLER PIPING SYSTEM SUPPLIES WATER TO THE STANDARD RESPONSE, THERMOSENSITIVE GLASS BULB SPRINKLER HEADS. FOR THE SPRINKLER HEAD LAYOUT AND SCHEDULE SEE FIRE PROTECTION SHEETS FP-1, FP-2, AND FP-3. THE PIPING, EITHER SEAMLESS BLACK STEEL (FOR ABOVEGROUND) OR DUCTILE IRON (FOR UNDERGROUND) PIPE, SHALL CONFORM TO NFPA 13 REQUIREMENTS AND THE FACTORY MUTUAL APPROVAL GUIDE. IF INSTALLED, THE DRY-PIPE SPRRINKLER SYSTEM SHALL BE CONSTRUCTED WITH GALVANIZED STEEL PIPE. ALL PIPING 2 INCHES AND SMALLER SHALL BE SCHEDULE 40 STEEL PIPE. PIPING 2-1/2 INCHES AND GREATER SHALL BE EITHER SCHEDULE 40 OR SCHEDULE 10 STEEL PIPE. ALL EXPOSED EXTERIOR AND DRY SYSTEM PIPING SHALL BE GALVANIZED STEEL PIPE. SEE SITE ARCHITECTS FOR UNDERGROUND PIPING FIRE PROTECTION CONTRACT DOCUMENTS. SPRINKLER PIPING SHALL BE SUPPORTED AS PER THE PIPE HANGING DETAILS ON SHEET FP-3. FOR FURTHER EQUIPMENT PERFORMANCE REQUIREMENTS SEE THE FIRE PROTECTION SPECIFICATION, SECTION 210000 IN "PROJECT MANUAL" CONTRACT DOCUMENTS.

3. APPLICABLE CODES AND STANDARDS

THE FIRE PROTECTION SYSTEM LAYOUT DOCUMENTS COMPLY WITH:

a. IFPC 2012
b. NFPA 13, 2010 EDITION, "INSTALLATION OF SPRINKLER SYSTEMS"
c. NFPA 24, 2010 EDITION, "STANDARD FOR THE INSTALLATION OF PRIVATE FIRE SERVICE MAINS AND THEIR APPURTENANCES"
d. NFPA 25, 2011 EDITION, "INSPECTION, TESTING AND MAINTENANCE OF WATER-BASED FIRE PROTECTION SYSTEMS"

4. HAZARD DESCRIPTION AND OCCUPANCY CLASSIFICATION

THE FIRE SPRINKLER SYSTEM COMPLIES WITH NFPA 13 ORDINARY HAZARD GROUP 2 AND RACK STORAGE BELOW 12 FEET REQUIREMENTS. THE STORAGE AREA ALSO COMPLIES WITH FACTORY MUTUAL REQUIREMENTS FOR COMMODITY CLASS 4 FOR STORAGE OF LESS THAN 12 FEET.

a. SALES AREA: ORDINARY HAZARD, GROUP 2.
b. RECEIVING/STORAGE AREA: ORDINARY HAZARD, GROUP 2.
c. LOADING DOCK, FRONT CANOPY AREA: ORDINARY HAZARD, GROUP 2.
d. BAKERY/DELICATESSEN: ORDINARY HAZARD, GROUP 2.
e. ADMINISTRATIVE OFFICES: LIGHT HAZARD

5. DESIGN APPROACH

a. SALES AREA AND VESTIBULE. SALES AREA EMPLOYS STANDARD RESPONSE, STANDARD COVERAGE, UPRIGHT TYPE SPRINKLERS WITH A 155°F TEMPERATURE RATING AND A K-FACTOR OF 8.0 OR BETTER. VESTIBULE AND CUSTOMER SERVICE AREAS WITH LAY-IN ACOUSTICAL TILE OR GYPSUM BOARD CEILING SYSTEMS SHALL USE 155°F RATED, STANDARD RESPONSE, STANDRAD COVERAGE, PENDENT TYPE SPRINKLER HEADS WITH A 5.6 K-FACTOR OR BETTER. THE SYSTEM SHALL HAVE A DESIGNED DENSITY OF 0.18 GPM/FT² FOR A REMOTE AREA OF 2500 FT². MAXIMUM SPRINKLER HEAD PROTECTION AREA IS LIMITED TO 130 FT²/HEAD.

b. RECEIVING/STORAGE, FREEZERS/COOLERS. THE RECEIVING/STORAGE AREA UTILIZE STANDARD RESPONSE, STANDARD COVERAGE, UPRIGHT SPRINKLERS, WITH A K-FACTOR OF 11.2 AND 155°F TEMPERATURE RATING. FREEZERS AND COOLERS SHALL UTILIZE DRY PENDENT STANDARD RESPONSE, STANDARD COVERAGE SPRINKLERS WITH A 5.6 K-FACTOR AND 175°F TEMPERATURE RATING. THE STORAGE AND FREEZER/COOLER AREAS SHALL HAVE A DESIGN DENSITY OF 0.30 GPM/FT² FOR A REMOTE AREA OF 2000 FT². MAXIMUM SPRINKLER HEAD PROTECTION AREA IS LIMITED TO 100 FT²/HEAD.

c. LOADING DOCK AREA. THE LOADING DOCK FIRE PROTECTION SHALL EMPLOY A GALVANIZED STEEL TREE-TYPE PIPING SYSTEM, LOCATED IN AN EXPOSED STRUCTURE UTILIZING STANDARD RESPONSE, STANDARD COVERAGE, UPRIGHT SPRINKLERS WITH A K-FACTOR OF 8.0 AND 155°F TEMPERATURE RATING AND A CORROSION RESISTANT COATING. THE MAXIMUM DESIGN REMOTE AREA IS LIMITED TO 2500 FT² AT A DENSITY OF 0.25 GPM/ FT². MAXIMUM PROTECTION AREA IS LIMITED TO 130 FT²/HEAD.

d. FRONT CANOPY. THE FRONT CANOPY FIRE PROTECTION SHALL EMPLOY A GALVANIZED STEEL TREE-TYPE PIPING SYSTEM TO PROVIDE WATER TO STANDARD RESPONSE, STANDARD COVERAGE, UPRIGHT SPRINKLERS WITH A K-FACTOR OF 5.6 AND 155°F TEMPERATURE RATING AND A CORROSION RESISTANT COATING. THE SYSTEM SHALL HAVE A DESIGNED DENSITY OF 0.18 GPM/FT² FOR A REMOTE AREA OF 2500 FT². MAXIMUM SPRINKLER HEADS SHALL NOT EXCEED 15FT. MAXIMUM SPRINKLER HEAD PROTECTION AREA IS LIMITED TO 130 FT²/HEAD.

e. BAKERY/DELI. THE BAKERY/DELI SHALL EMPLOY STANDARD RESPONSE, STANDARD COVERAGE, PENDENT TYPE SPRINKLERS WITH A K-FACTOR OF 5.6 OR BETTER AND 155°F TEMPERATURE RATING, EXCEPT FOR THE SPRINKLER HEADS ABOVE THE OVENS. HEADS ABOVE THE OVENS SHALL HAVE A TEMPERATURE RATING OF 286°F. THE SYSTEM SHALL HAVE A DESIGN DENSITY OF 0.18 GPM/ FT² OVER A REMOTE DESIGN AREA OF 2500 FT². MAXIMUM SPRINKLER HEAD PROTECTION AREA IS LIMITED TO 130 FT²/HEAD.

f. ADMINISTRATIVE SPACES. THE ADMINISTRATIVE SPACES, SUPPLIED BY PIPE DROPS FROM THE GRIDDED WET PIPE SYSTEM, SHALL EMPLOY QUICK RESPONSE, STANDARD COVERAGE, PENDENT TYPE SPRINKLERS WITH A K-FACTOR OF 5.6 OR BETTER AND 155°F TEMPERATURE RATING. THE AREA SHALL HAVE AT A MINIMUM A DESIGN DENSITY OF 0.18 GPM/ FT² OVER A DESIGN REMOTE AREA OF 2500 FT². MAXIMUM SPRINKLER HEAD PROTECTION AREA OF 130 FT²/HEAD.

g. FIRE STOPPING FOR STEEL PIPE PENETRATING A CONCRETE FLOOR OR CONCRETE BLOCK WALL SHALL BE IN ACCORDANCE WITH UL SYSTEM CAJ-1081 USING THERMAFIBER MINERAL WOOL INSULATION AND FIRECODE BRAND FIRE STOP COMPOUND FOR 3 HOUR RATING.

6. ACCEPTANCE TESTING

THE SPRINKLER PIPE DISTRIBUTION SYSTEM SHALL BE HYDROSTATICALLY TESTED TO ADHERE TO THE LEAKAGE AND PRESSURE REQUIREMENTS OF NFPA 13 AND NFPA 24. WHERE DRY PIPE SPRINKLER SYSTEM IS INSTALLED, AN ADDITIONAL AIR PRESSURE TEST SHALL BE CONDUCTED. OPERATIONAL TESTS SHALL BE CONDUCTED ON THE FOLLOWING ITEMS:

a. WATER FLOW SENSING DEVICES.
b. DRY PIPE SYSTEM ACTIVATION.
c. MAIN DRAIN VALVE.
d. PRESSURE REDUCING VALVE.
e. WATER FLOW ALARMS.

UPON COMPLETION OF THE FLUSHING AND PRESSURE TESTING OF THE PIPING THE CONTRACTOR SHALL SUBMIT TO THE AHJ, FACTORY MUTUAL, AND PUBLIX NFPA 13 FORMS:

"CONTRACTORS' MATERIAL AND TEST CERTIFICATE FOR UNDERGROUND PIPING", AND
"CONTRACTORS' MATERIAL AND TEST CERTIFICATE FOR ABOVE GROUND PIPING".

7. CONTROL SYSTEMS

THE SPRINKLER SYSTEM WILL ACTIVATE WHENEVER A SPRINKLER HEAD SENSING BULB BREAKS OR THE MANUAL INSPECTOR TEST VALVE OPENS. REDUCED PRESSURE IN THE PIPING SYSTEM OPENS THE ALARM CHECK VALVE ALLOWING WATER TO FLOW INTO THE PIPING SYSTEM AND ACTIVATES THE MOTOR WATER ALARM. A WATER FLOW SENSOR WILL PROVIDE AN ELECTRICAL SIGNAL THE FIRE ALARM WARNING SYSTEM WHICH WILL THEN:

a. SHUTDOWN ALL RTU'S AND SUPPLY AIR FANS,
b. ENERGIZE ALL EXHAUST AIR FANS,
c. ACTIVATE THE STORE'S FIRE ALARMS AND STROBE LIGHTS,
d. NOTIFY THE FIRE DEPARTMENT VIA THE FIRE ALARM SYSTEM.

TAMPER SWITCHES ON THE RISER'S OS&Y CONTROL VALVE AND BUILDING BACKFLOW PREVENTER WILL PROVIDE AN ALARM WHENEVER THE VALVES ARE CLOSED. THE BACKFLOW PREVENTER SHALL BE APPROVED BY THE AHJ AND HAVE A MAXIMUM PRESSURE DROP OF 8 PSI AT 2000 GPM.

8. POINT OF SERVICE

SITE PIPING FROM THE POINT OF SERVICE TO PUBLIX SUPERMARKET SHALL BE SIZED AT 8" AND CONTAIN AN ADEQUATELY SIZED, FREEZE PROTECTED BACKFLOW PREVENTER. PIPING FROM THE SITE FIRE MAIN TO PUBLIX'S FIRE PROTECTION RISER SHALL BE SIZED TO MEET THE HYDRAULIC REQUIREMENTS OF THE MOST CRITICAL HAZARD.

9. STRUCTURAL SUPPORT AND STRUCTURAL OPENINGS

THE STRUCTURAL SYSTEMS FOR THIS BUILDING ARE DESIGNED TO SUPPORT TOTAL (LIVE AND DEAD) FIRE PROTECTION PIPING LOADS OF:
2 PSI FT FOR 2 IN PIPING
40 LBS/L FT FOR 4 IN PIPING
80 LBS/L FT FOR 6 IN PIPING
THERE ARE NO SIGNIFICANT STRUCTURAL OPENINGS REQUIRED FOR THE FIRE SPRINKLER SYSTEM.

10. CONTRACTOR DOCUMENTS

THE CONTRACTOR SHALL PROVIDE DETAILED FABRICATION DRAWINGS AND HYDRAULIC CALCULATIONS AS PER NFPA 13 TO THE AUTHORITY HAVING JURISDICTION AND PUBLIX SUPER MARKETS, INC. FOR APPROVAL BEFORE BEGINNING WORK. SHOULD THE FIRE SPRINKLER CONTRACTOR'S LAYOUT DOCUMENTS VARY SIGNIFICANTLY FROM THE ENGINEERING DOCUMENTS, SUCH DOCUMENTS ARE NOT COMPLIANT UNLESS APPROVED BY THE ENGINEER OF RECORD AND ACCOMPANIED BY REVISED ENGINEERING DOCUMENTS.

PUBLIX BUILDINGS REQUIRING SEISMIC SUPPORTS THE FIRE PROTECTION CONTRACTOR SHALL INCLUDE MANUFACTURING SPECIFICATIONS SHEET OF THE SEISMIC SUPPORTS, THE LOCATION OF THE SEISMIC SUPPORT ON THE LAYOUT DOCUMENTS AND SEISMIC BRACING CALCULATIONS.

11. MICROBIAL INDUCED CORROSION (MIC)

RESULTS OF THE REPORT FROM THE LOCAL WATER PURVEYOR TO THE ENGINEER OF RECORD DOES DENOTE THE OCCURANCE OF MIC IN THE WATER SUPPLY. THE ENGINEER OF RECORD AGREES WITH THE PURVEYOR'S CONCLUSION.

12. QUALITY AND PERFORMANCE SPECIFICATIONS FOR FIRE PROTECTION EQUIPMENT

ALL YARD AND INTERIOR FIRE PROTECTION EQUIPMENT SHALL BE UL LISTED AND FM APPROVED. IN AREAS OF EXPOSED STRUCTURE ALL PIPING SHALL BE ROUTED 8 INCHES ABOVE THE BOTTOM CHORD OF THE JOIST AND GIRDER TRUSSES. PIPING ROUTED ABOVE AREAS WITH CEILINGS, SHALL RUN 8 INCHES ABOVE THE CEILING NOT TO CONFLICT WITH THE LIGHTING. ALL MATERIAL AND WORK SHALL ADHERE TO NFPA 13, FACTORY MUTUAL, AND THE AUTHORITY HAVING JURISDICTION.

13. FLOW TEST RESULTS:

WATER SUPPLY PRESSURES ARE CALCULATED TO THE BASE OF PUBLIX'S FIRE LINE RISERS WITH NO OTHER DEMAND ON THE FIRE LINE.

SOURCE:	LEXINGTON COUNTY JOINT MUNICIPAL WATER & SEWER COMMISSION	
DATE/TIME:	05/01/2017	
ELEVATION:	422.5 FT	
STATIC PRESSURE @ NO FLOW:	31.0 PSI	78.4 PSI W/FIRE PUMP
FLOW RATE:	848 GPM	750 GPM W/FIRE PUMP
RESIDUAL PRESSURE:	29.0 PSI	72.0 PSI W/FIRE PUMP
HYDRANT BUTT COEFFICIENT:	0.80	

THE WATER SUPPLY TO THE BUILDING IS PROVIDED BY THE SITE BY
__X__ CIRCULATING OR ____ DEAD END
8" FIRE MAIN CONNECTED TO AN EXISTING _8_ INCH WATER MAIN. MINIMUM DURATION OF THE SUPPLY OF WATER SHALL BE IN ACCORDANCE WITH NFPA 13, CH.11.

14. THIS SITE DOES REQUIRE A FIRE PUMP.

15. A WATER STORAGE TANK IS NOT REQUIRED FOR THIS SITE.

16. OWNER'S INFORMATION:

SEE OWNER'S INFORMATION CERTIFICATE SHT.FP-4.

17. SYSTEM PRESSURE AND FLOW REQUIREMENTS AT THE BASE OF THE RISER

ZONE#1 (RISER 1) STORAGE/RECEIVING	0.362 GPM/FT² (2007 FT²)	728 GPM @ 24.4 PSI
	O.S. HOSE ALLOWANCE	250 GPM
		978 GPM
ZONE#2 (RISER 1) SALES	0.192 GPM/FT² (2537 FT²)	489 GPM @ 28 PSI
	O.S. HOSE ALLOWANCE	250 GPM
		739 GPM
ZONE#1 (RISER 2)	0.33 GPM/FT² (1110 FT²)	327 GPM @ 26 PSI
	O.S. HOSE ALLOWANCE	250 GPM
		577 GPM
ZONE#2 (RISER 2) FRONT CANOPY - LOWER SECTION	0.25 GPM/FT² (1634 FT²)	443 GPM @ 26 PSI
	O.S. HOSE ALLOWANCE	250 GPM
		693 GPM
ZONE#3 (RISER 2) FRONT CANOPY - UPPER SECTION	0.23 GPM/FT² (1015 FT²)	225 GPM @ 29 PSI
	O.S. HOSE ALLOWANCE	250 GPM
		475 GPM

18. TOTAL AREA COVERED

RISER / ZONE#1	RECEIVING / STORAGE -	3008 FT²
	SALES FLOOR -	2537 FT²
	ADMINSTRATION -	1500 FT²
	BAKERY / DELI -	3570 FT²
RISER / ZONE#2	LOADING DOCK -	1110 FT²
	FRONT CANOPY -	2849 FT²

19. SEISMIC RESTRAINS (WHERE REQUIRED)

ALL PIPING SHALL BE PROVIDED WITH SEISMIC RESTRAINTS IN ACCORDANCE WITH SEISMIC HAZARD LEVEL "SHL-B" OF THE ANSI/SMACNA SEISMIC RESTRAINT MANUAL: "GUIDELINES FOR MECHANICAL SYSTEMS" DATED 1998, SECOND EDITION, AS PUBLISHED BY THE SHEET METAL AND AIR CONDITIONING CONTRACTORS NATIONAL ASSOCIATION, INC. AND IN ACCORDANCE WITH NFPA 13, CH. 9.

Publix. SUPER MARKETS

CORPORATE OFFICES, FACILITIES DESIGN
BOX 407, LAKELAND, FL 33802
(863) 680-5295
PHYSICAL ADDRESS:
3300 PUBLIX CORPORATE PARKWAY
LAKELAND, FL 33811-3311

PUBLIX FACILITIES DESIGN DEPARTMENT

DAVID ... EE, AIA
ARCHITECT ... 91318

DAVID R...
ARCHITECT - FL. REG. ...57
GA. REG. ...81
SC. REG. ...77
AL. REG. ...4
TN. REG. ...497
NC. REG. ...432
VA. REG. ...401017097

JOHN ... ENS, PE
CIVIL/STRUCTURAL - FL. REG. 45277
GA. REG. 020251
SC. REG. 16340
AL. REG. 20382
TN. REG. 101507

PAUL C. HARMAN, PE
STRUCTURAL - FL. REG. 51959
GA. REG. 27740
SC. REG. 21754
AL. REG. 24905
TN. REG. 107882
NC. REG. 39673
VA. REG. 0402055022

JOHN J. CARAMALIS, PE
MECHANICAL - FL. REG. 43889
GA. REG. 021246
SC. REG. 16521
AL. REG. 20581
TN. REG. 108507
VA. REG. 0402055478

ANTHONY CLEMENTI, PE
MECHANICAL - FL. REG. 54781
GA. REG. 31882
SC. REG. 25591
AL. REG. 28469
TN. REG. 111382
NC. REG. 039664
VA. REG. 0402056137

RAYMOND J. SIRIANNI, PE
ELECTRICAL - FL. REG. 54085
GA. REG. 025636
SC. REG. 19743
AL. REG. 23065
TN. REG. 108038
NC. REG. 039963
VA. REG. 0402055379

NORMAN MEIER, PE
ELECTRICAL - FL. REG. 59422
GA. REG. 31492
SC. REG. 25290
AL. REG. 28079

© COPYRIGHT 2017 PUBLIX SUPER MARKETS, INC.

THESE CONSTRUCTION DOCUMENTS ARE THE PROPERTY OF PUBLIX SUPER MARKETS, INC. AND ARE NOT TO BE COPIED OR REUSED FOR ANY SPECIFIC BUILDING WITHOUT WRITTEN PERMISSION. THESE DRAWINGS SHALL NOT BE DUPLICATED WITHOUT PRIOR WRITTEN PERMISSION OF PUBLIX SUPER MARKETS, INC.

THE DESIGN INDICATED IN THESE CONSTRUCTION DOCUMENTS DOES, TO THE BEST OF MY KNOWLEDGE, INFORMATION, AND BELIEF, COMPLY WITH THE APPLICABLE MINIMUM BUILDING CODES

PLOT DATE:
25 AUG 2017

REVISION DATA:

1637
PUBLIX @ LAKE CROSSING

PLATT SPRINGS RD & HWY 6
LEXINGTON, LEXINGTON, SC

45.9.2
V0807-2017
SIENNA - LITE

FIRE PROTECTION DETAILS & NOTES

SCALE: 1/8" = 1'-0"

FP-3

28-AUG-2017 14:41 xjvs P:\1600-1699\1637\1637fp03.dgn

Order Plans @ www.LDLine.com