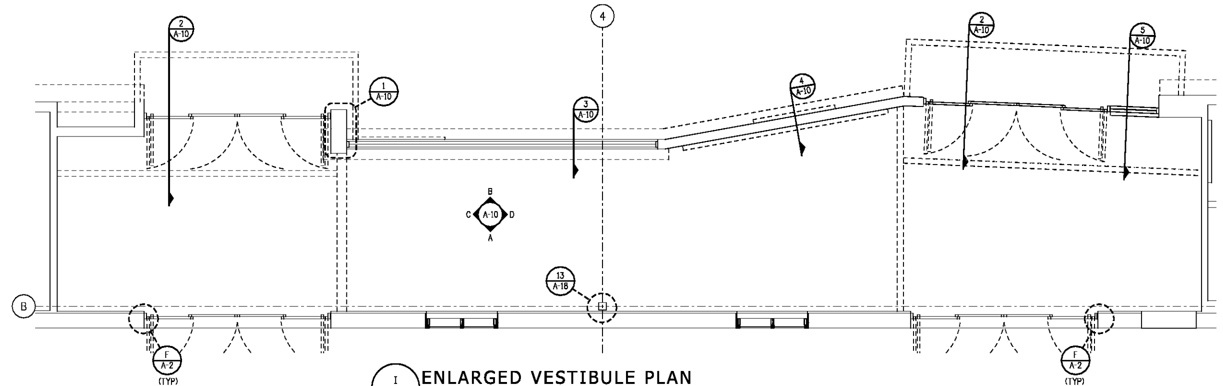

I A-10 ENLARGED VESTIBULE PLAN
SCALE: ¼"=1'-0"

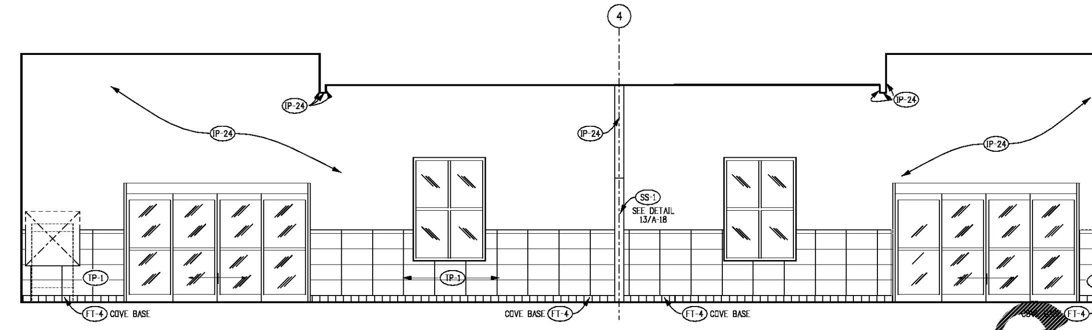

A A-10 VESTIBULE INTERIOR ELEVATION
SCALE: ¼"=1'-0"

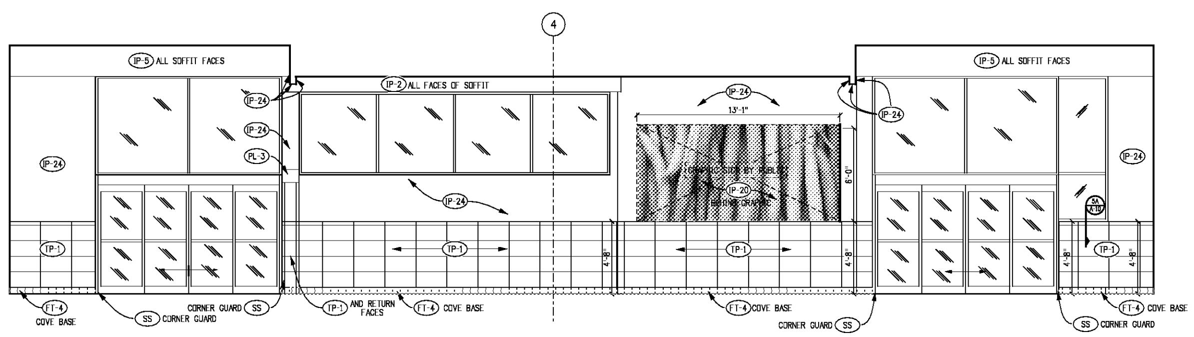

B A-10 VESTIBULE INTERIOR ELEVATION
SCALE: ¼"=1'-0"

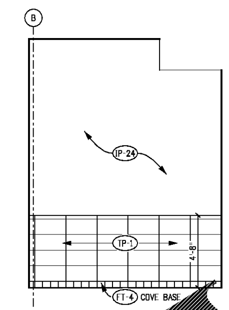

C A-10 VESTIBULE INTERIOR ELEVATION
SCALE: ¼"=1'-0"

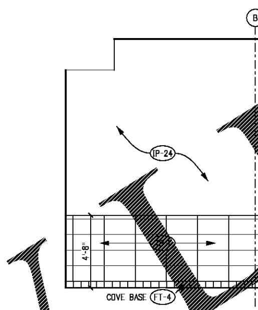

D A-10 VESTIBULE INTERIOR ELEVATION
SCALE: ¼"=1'-0"

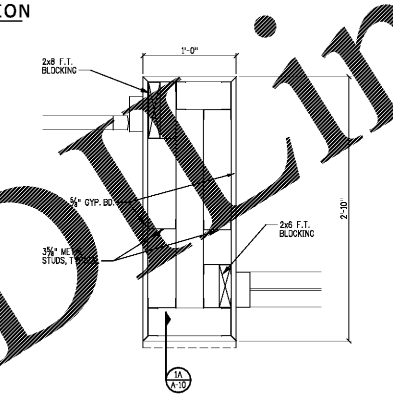

1 A-10 WALL DETAIL AT ENTRANCE VESTIBULE
SCALE: 1½"=1'-0"

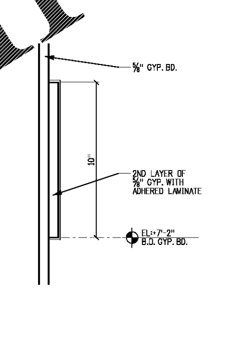

1A A-10 FALSE COLUMN LAMINATE DETAIL
SCALE: 3"=1'-0"

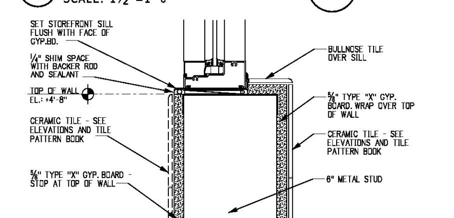

5A A-10 STOREFRONT SILL DETAIL
SCALE: 3"=1'-0"

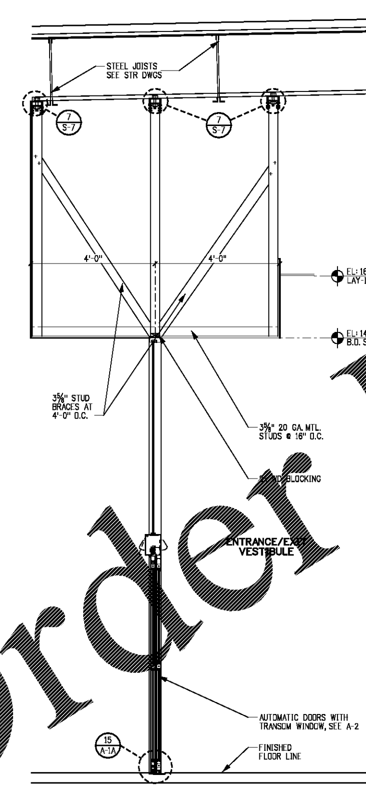

2 A-10 WALL SECTION AT VESTIBULE
SCALE: ½"=1'-0"

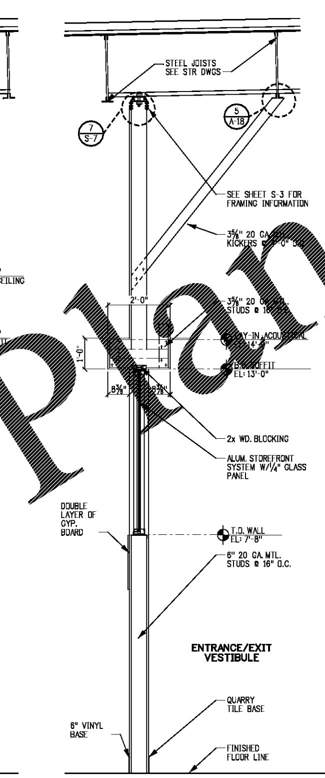

3 A-10 WALL SECTION AT VESTIBULE
SCALE: ½"=1'-0"

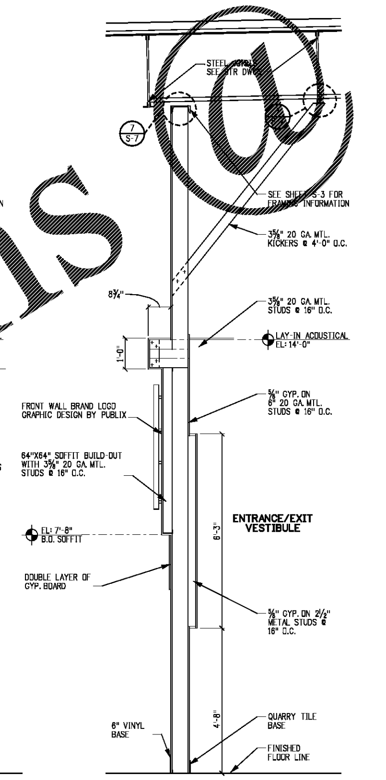

4 A-10 WALL SECTION AT VESTIBULE
SCALE: ½"=1'-0"

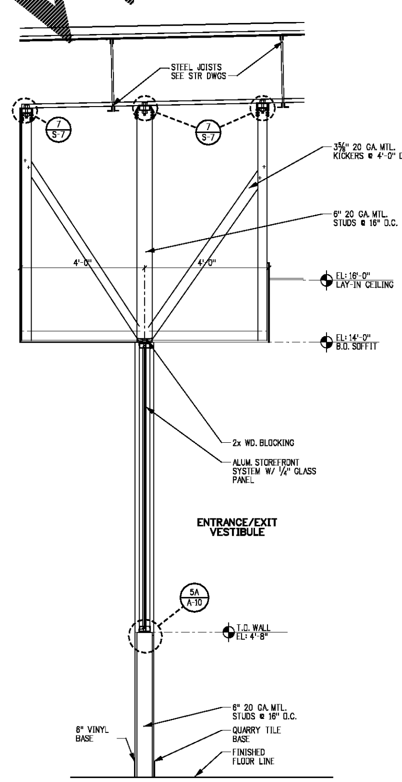

5 A-10 WALL SECTION AT VESTIBULE
SCALE: ½"=1'-0"

FINISHES & COLORS LEGEND (SIENNA & SIENNA LITE)

Code	Description
IP-	INTERIOR PAINT
IP-1	SHERWIN WILLIAMS SW 6102 PORTABELLO
IP-2	SHERWIN WILLIAMS SW 0042 RUSKIN ROOM GREEN
IP-3	(NOT USED)
IP-4	SHERWIN WILLIAMS SW 6119 ANTIQUE WHITE
IP-5	SHERWIN WILLIAMS SW 6674 JONQUIL
IP-6	SHERWIN WILLIAMS SW 6516 DOWN POUR
IP-7	(NOT USED)
IP-8	SHERWIN WILLIAMS SW 6431 LEAP FROG
IP-9	(NOT USED)
IP-10	SHERWIN WILLIAMS SW 6716 DANCING GREEN
IP-11	SHERWIN WILLIAMS SW 6228 REFUGE
IP-12	SHERWIN WILLIAMS SW 6206 OYSTER BAY
IP-13	SHERWIN WILLIAMS SW 6321 RED BAY
IP-14	SHERWIN WILLIAMS SW 7069 IRON ORE
IP-15	SHERWIN WILLIAMS SW 6116 TATAMI TAN
IP-16	(NOT USED)
IP-17	SHERWIN WILLIAMS SW 6307 FINE WINE
IP-18	SHERWIN WILLIAMS SW 6340 BAKED CLAY
IP-19	SHERWIN WILLIAMS SW 66R38 SAFETY RED
IP-20	SHERWIN WILLIAMS ALKYD PRIMER
IP-21	SHERWIN WILLIAMS SW 6254 LAZY GRAY
IP-22	SHERWIN WILLIAMS SW 7006 EXTRA WHITE
IP-23	(NOT USED)
IP-24	SHERWIN WILLIAMS SW 0011 CREWEL TAN
IP-25	(NOT USED)
IP-26	(NOT USED)
IP-27	SHERWIN WILLIAMS SW 6515 LEISURE BLUE
IP-28	SHERWIN WILLIAMS SW 6527 BLISSFUL BLUE
IP-MA	MATCH EXISTING ADJACENT COLOR
IP-EX	EXISTING PAINT COLOR TO REMAIN
PL-	PLASTIC LAMINATE
PL-1	(NOT USED)
PL-2	(NOT USED)
PL-3	WILSONART ALUMASTEEL 6277 TYPE 418
PL-4	WILSONART #7939K-18 "BLOND ECHO"
PL-5	WILSONART #7951K-18 "ASIAN SUN"
PL-6	(NOT USED)
PL-7	WILSONART #7209K-78 "NEPAL TEAK"
PL-8	WILSONART #4673-60 "SAFFRON TIGRIS"
PL-9	WILSONART #4912-38 "GILDED MESH"
PL-10	WILSONART #4588-07 "KALAHARI TOPAZ"
PL-11	WILSONART #7962K-18 "ALOE"
PL-12	WILSONART "BRUSHED ALUMINUM" EDGE BANDING
PL-MA	NEW PLASTIC LAMINATE TO MATCH EXISTING
PL-EX	EXISTING PLASTIC LAMINATE TO REMAIN
FRP-	FIBERGLASS REINFORCED PLASTIC
FRP-1	SEQUENTIA "STRUCTOGLAS FRFR" - "ALMOND" MARLITE "STANDARD FRP" - "IVORY" GLASTEEL "GLASLINER FRP" - "IVORY" CRANE COMPOSITES (KEMLITE) "FIRE-X GLASBORD" - "COLONIAL WHITE"
FRP-2	SEQUENTIA "STRUCTOGLAS FRFR" - "WHITE" MARLITE "STANDARD FRP" - "WHITE" GLASTEEL "GLASLINER FRP" - "BRIGHT WHITE" CRANE COMPOSITES (KEMLITE) "FIRE-X GLASBORD" - "WHITE"
FRP-3	SEQUENTIA "STRUCTOGLAS FRFR" - "GRAY" MARLITE "STANDARD FRP" - "LIGHT GRAY" GLASTEEL "GLASLINER FRP" - "LIGHT GRAY" CRANE COMPOSITES (KEMLITE) "FIRE-X GLASBORD" - "PEARL GRAY"
FRP-EX	EXISTING FRP PANELS TO REMAIN
FRP-MA	NEW FRP PANELS TO MATCH EXISTING
CW-	COOLER WALL/FREEZER PANEL FINISH
CW-A	COOLER WALL/FREEZER PANEL - EMBOSSED ALUMINUM FINISH
CW-S	COOLER WALL/FREEZER PANEL - STAINLESS STEEL FINISH
CW-W	COOLER WALL/FREEZER PANEL - WHITE FINISH
CW-EX	COOLER WALL/FREEZER PANEL - EXISTING TO REMAIN
	METAL FINISHES
SS-1	STAINLESS STEEL
SS-EX	EXISTING STAINLESS STEEL FINISH TO REMAIN
GL-1	GALVANIZED STEEL
	CERAMIC TILE
TP- / FT-	CERAMIC & FLOOR TILE PATTERN - SEE CORRESPONDING DETAIL IN PUBLIX TILE PATTERN MANUAL AT https://app.box.com/s/0cjp4umwkdf54weq66ud
TP-EX	EXISTING CERAMIC TILE TO REMAIN
TP-MA	NEW CERAMIC TILE TO MATCH EXISTING
	WALL BASE
VB-1	VINYL BASE- 6" COVED "JOHNSONITE #49 BEIGE" OR EQUAL
VB-2	VINYL BASE- 4" COVED (MEDIUM GREY)
VB-3	VINYL BASE- 6" COVED (MEDIUM GREY)
WB-1	WOOD BASE- 4" (MEDIUM GREY)
MB-1	NEW 6" MMA BASE
SS-B	STAINLESS STEEL BASE- 6" COVED
NB-MA	NEW BASE TO MATCH EXISITING ADJACENT
	MISCELLANEOUS
TLP-1	ALL TOILET PARTITIONS TO BE: SCRANTON "PARCHMENT" OR GLOBAL "CREAM" OR MILLS/BRADLEY "LINEN" OR AMPCO "TOFFEE"
WD-1	TONGUE AND GROOVE PLANKING - ½" THICK BY 4" WIDE, V-JOINT LONGLEAF SOUTHERN PINE, S4S FINISH - MINWAX WOOD FINISH "GOLDEN PECAN 245"
WD-2	(NOT USED)
WC-EX	EXISTING WALL COVERING TO REMAIN
QZ-1	QUARTZ RESIN SOLID SURFACE - CAMBRIA, DESERT COLLECTION, CHERRYBROOK (3CM THICK - MITRED EDGE)
AM-1	ACCENT MATERIAL PROVIDED BY PUBLIX, SEE PUBLIX REPRESENTATIVE FOR MORE INFORMATION
FROST	FROSTED GLASS DECORATIVE FILM - 3M FASARA GLASS FINISHES - CIELO
PP-1	PAINTED PLYWOOD - SHERWIN WILLIAMS SW 6524 LAZY GRAY
WV-	SERVICE DEPARTMENT WALL VINYL ACCENT BAND (OF/OI) - SEE PUBLIX REPRESENTATIVE FOR MORE INFORMATION.
	WV-MT, WV-SF, WV-PR, WV-BK, WV-DL, WV-VE

NOTES:

1. NOT ALL COLORS OR FINISHES MAY BE USED ON THIS PROTOTYPE
2. FOR FLOOR FINISHES, SEE SHEET A-1A.
3. INTERIOR PAINTS FOR SALES AREA WALL SURFACES ABOVE 8' ARE TO BE "FLAT FINISH"; ALL OTHER SURFACES TO BE SEMI-GLOSS SATIN FINISH.
4. APPLY BLOCK FILLER TO ALL MASONRY TO RECEIVE PAINT.
5. ALL SURFACES BEHIND CASES, WALK-IN COOLER, OR FREEZERS SHALL JUST RECEIVE PRIMER OR BLOCK FILLER. ALL EXPOSED SURFACES ABOVE THE CASES, WALK-IN COOLER, OR FREEZERS SHALL ALSO RECEIVE THE FINISH COAT OF PAINT.
6. IN RECEIVING/STORAGE, A LINE 2" WIDE OF SW B-66R38 SAFETY RED SHALL BE PAINTED AT A HEIGHT OF 12'-0" (TOP OF LINE) ON WALLS WHERE STORAGE OCCURS. ABOVE THIS LINE WILL BE STENCILED, IN 3" CAPITAL LETTERS, "NO STORAGE ABOVE THIS LINE."
7. PAINT ALL EXPOSED UTILITY DROPS SUCH AS PLUMBING LINES, REFRIGERATION LINES, ELECTRICAL CONDUIT, DUCTS AND COLUMNS TO MATCH ADJACENT WALL SURFACE. WHEN MORE THAN ONE COLOR IS USED ON WALL, MATCH COLOR CHANGES AT EXACT SAME HEIGHTS.

NOTE:
ALL GAS PIPING TO BE PAINTED SAFETY YELLOW

Publix. SUPER MARKETS

CORPORATE OFFICES, FACILITIES DESIGN
BOX 407, LAKELAND, FL 33802
(863) 680-5295
PHYSICAL ADDRESS:
3300 PUBLIX CORPORATE PARKWAY
LAKELAND, FL 33811-3311

PUBLIX FACILITIES DESIGN DEPARTMENT

DAVID ... BEE, AIA
ARCHITECT ... 91318

DAVID ...
ARCHITECT - FL. REG. ...
GA. REG. ...
SC. REG. ...
AL. REG. ...
TN. REG. ...
NC. REG. ...
VA. REG. 0401017097

JOHN ... ENS, PE
CIVIL/STRUCTURAL - FL. REG. 45277
GA. REG. 020251
SC. REG. 16340
AL. REG. 20382
TN. REG. 101507

PAUL C. HARMAN, PE
STRUCTURAL - FL. REG. 51959
GA. REG. 27740
SC. REG. 21754
AL. REG. 24905
TN. REG. 107882
NC. REG. 39673
VA. REG. 0402055022

JOHN J. CARAMALIS, PE
MECHANICAL - FL. REG. 43889
GA. REG. 021246
SC. REG. 16521
AL. REG. 20581
TN. REG. 108507
VA. REG. 0402055478

ANTHONY CLEMENTI, PE
MECHANICAL - FL. REG. 54781
GA. REG. 31882
SC. REG. 25591
AL. REG. 28469
TN. REG. 111382
NC. REG. 039664
VA. REG. 0402056137

RAYMOND J. SIRIANNI, PE
ELECTRICAL - FL. REG. 54085
GA. REG. 025636
SC. REG. 19743
AL. REG. 23065
TN. REG. 108038
NC. REG. 039963
VA. REG. 0402055379

NORMAN MEIER, PE
ELECTRICAL - FL. REG. 59422
GA. REG. 31492
SC. REG. 25290
AL. REG. 28079

© COPYRIGHT 2017
PUBLIX SUPER MARKETS, INC.

THESE CONSTRUCTION DOCUMENTS ARE THE PROPERTY OF PUBLIX SUPER MARKETS, INC. AND ARE NOT TO BE COPIED OR REUSED FOR ANY SPECIFIC BUILDING WITHOUT WRITTEN PERMISSION. THESE DRAWINGS SHALL NOT BE DUPLICATED WITHOUT PRIOR WRITTEN PERMISSION OF PUBLIX SUPER MARKETS, INC.

THE DESIGN INDICATED IN THESE CONSTRUCTION DOCUMENTS DOES, TO THE BEST OF MY KNOWLEDGE, INFORMATION, AND BELIEF, COMPLY WITH THE APPLICABLE MINIMUM BUILDING CODES

PLOT DATE:
25 AUG 2017

REVISION DATA:

1637
PUBLIX @ LAKE CROSSING

PLATT SPRINGS RD & HWY 6
LEXINGTON, LEXINGTON, SC

45.9.2
V0807-2017
SIENNA - LITE

ENLARGED VESTIBULE PLAN, ELEVATION AND SECTIONS

SCALE: AS NOTED

A-10

Order Plans @ WWW.LDILine.com