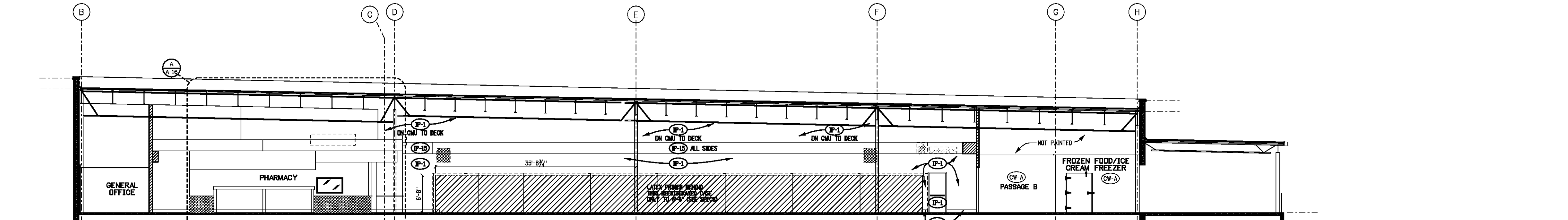

FINISHES & COLORS
SIDE WALL INTERIOR ELEVATION
3/A-8 SCALE: ⅛"=1'-0"

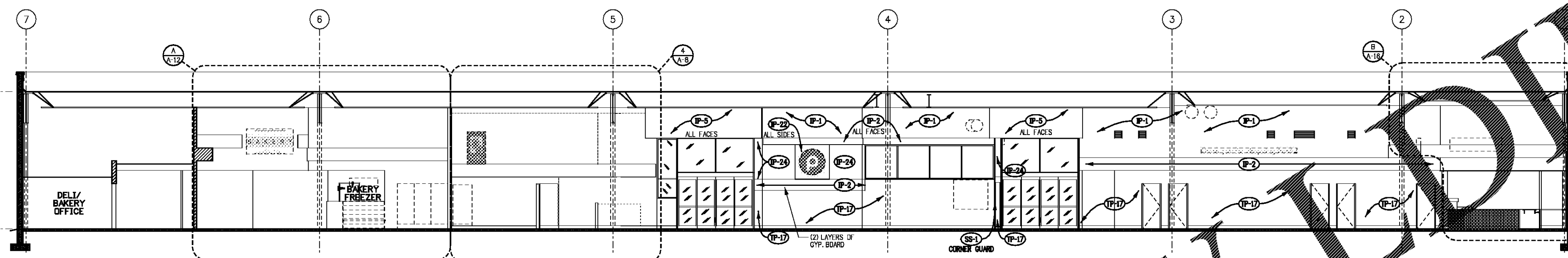

FINISHES & COLORS
FRONT WALL INTERIOR ELEVATION
2/A-8 SCALE: ⅛"=1'-0"

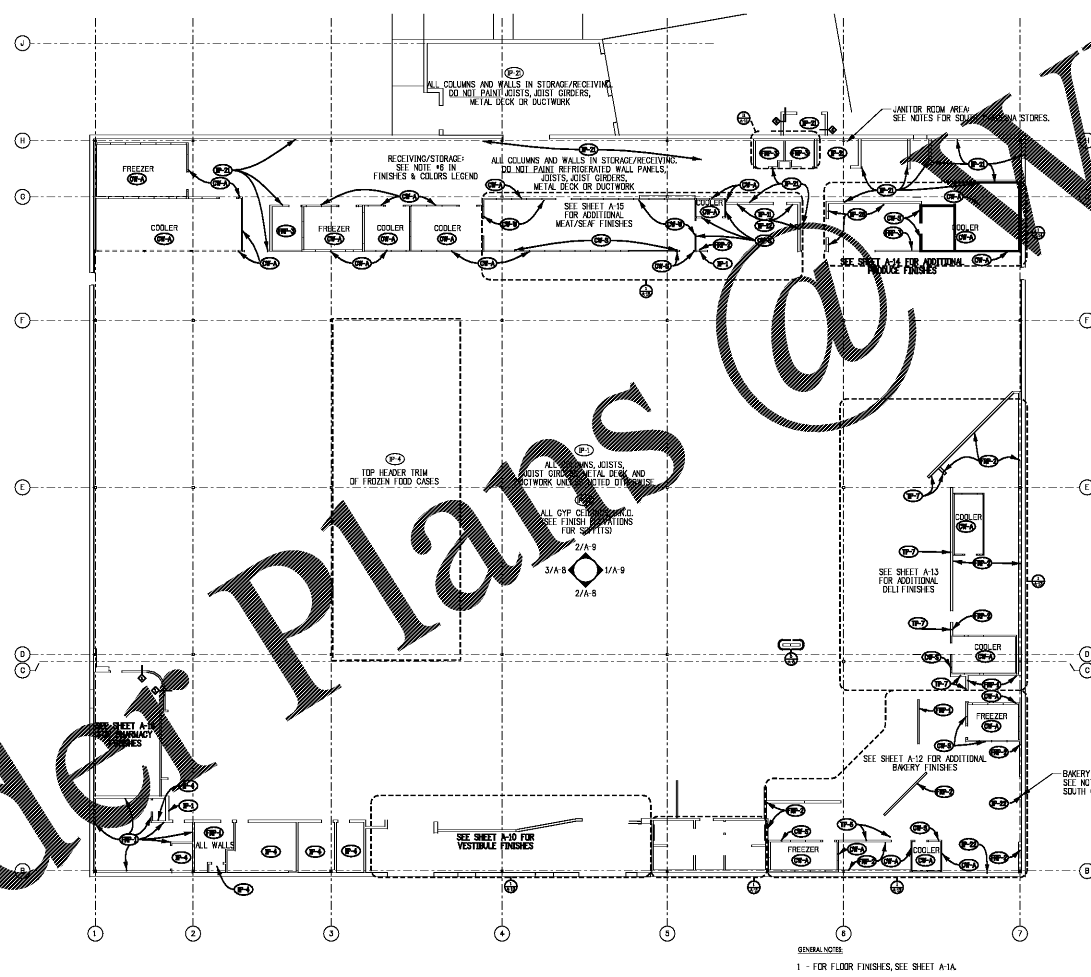

FINISHES & COLORS PLAN
1/A-8 SCALE: 1/16"=1'-0"

GENERAL NOTES:

1 - FOR FLOOR FINISHES, SEE SHEET A-1A.

2 - SEE INTERIOR ELEVATIONS, TILE ELEVATIONS AND WALL SECTIONS FOR WALL FINISHES NOT LABELED ON THIS PLAN.

NOTES FOR SOUTH CAROLINA STORES:

1 - ADD FRP-2 FINISH UP TO 4'-0" A.F.F. TO EXPOSED CMU WALL IN BAKERY AND DELI WORK AREAS.

2 - ADD FRP-3 FINISH UP TO 4'-0" A.F.F. TO EXPOSED CMU WALL IN JANITOR'S ROOM

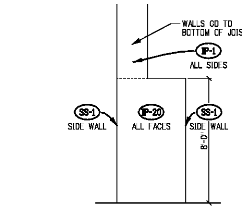

APRON WALL
FINISH ELEVATION
5/A-8 SCALE: ¼" = 1'-0"

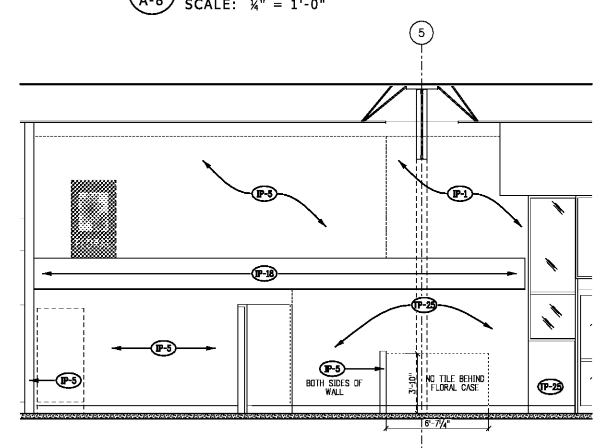

FLORAL BOUTIQUE WALL FINISHES ELEVATION
4/A-8 SCALE: ¼"=1'-0"

FINISHES & COLORS LEGEND (SIENNA & SIENNA LITE)

IP- INTERIOR PAINT
- IP-1 SHERWIN WILLIAMS SW 6102 PORTABELLO
- IP-2 SHERWIN WILLIAMS SW 0042 RUSKIN ROOM GREEN
- IP-3 (NOT USED)
- IP-4 SHERWIN WILLIAMS SW 6119 ANTIQUE WHITE
- IP-5 SHERWIN WILLIAMS SW 6674 JONQUIL
- IP-6 SHERWIN WILLIAMS SW 6516 DOWN POUR
- IP-7 (NOT USED)
- IP-8 SHERWIN WILLIAMS SW 6431 LEAP FROG
- IP-9 (NOT USED)
- IP-10 SHERWIN WILLIAMS SW 6716 DANCING GREEN
- IP-11 SHERWIN WILLIAMS SW 6228 REFUGE
- IP-12 SHERWIN WILLIAMS SW 6206 OYSTER BAY
- IP-13 SHERWIN WILLIAMS SW 6321 RED BAY
- IP-14 SHERWIN WILLIAMS SW 7069 IRON ORE
- IP-15 SHERWIN WILLIAMS SW 6116 TATAMI TAN
- IP-16 (NOT USED)
- IP-17 SHERWIN WILLIAMS SW 6307 FINE WINE
- IP-18 SHERWIN WILLIAMS SW 6340 BAKED CLAY
- IP-19 SHERWIN WILLIAMS SW 66R38 SAFETY RED
- IP-20 SHERWIN WILLIAMS ALKYD PRIMER
- IP-21 SHERWIN WILLIAMS SW 6254 LAZY GRAY
- IP-22 SHERWIN WILLIAMS SW 7006 EXTRA WHITE
- IP-23 (NOT USED)
- IP-24 SHERWIN WILLIAMS SW 0011 CREWEL TAN
- IP-25 (NOT USED)
- IP-26 (NOT USED)
- IP-27 SHERWIN WILLIAMS SW 6515 LEISURE BLUE
- IP-28 SHERWIN WILLIAMS SW 6527 BLISSFUL BLUE
- IP-MA MATCH EXISTING ADJACENT COLOR
- IP-EX EXISTING PAINT COLOR TO REMAIN

PL- PLASTIC LAMINATE
- PL-1 (NOT USED)
- PL-2 (NOT USED)
- PL-3 WILSONART ALUMASTEEL 6277 TYPE 418
- PL-4 WILSONART #7939K-18 "BLOND ECHO"
- PL-5 WILSONART #7951K-18 "ASIAN SUN"
- PL-6 (NOT USED)
- PL-7 WILSONART #7209K-78 "NEPAL TEAK"
- PL-8 WILSONART #4673-60 "SAFFRON TIGRIS"
- PL-9 WILSONART #4912-38 "GILDED MESH"
- PL-10 WILSONART #4588-07 "KALAHARI TOPAZ"
- PL-11 WILSONART #7962K-18 "ALOE"
- PL-12 WILSONART "BRUSHED ALUMINUM" EDGE BANDING
- PL-MA NEW PLASTIC LAMINATE TO MATCH EXISTING
- PL-EX EXISTING PLASTIC LAMINATE TO REMAIN

FRP- FIBERGLASS REINFORCED PLASTIC
- FRP-1 SEQUENTIA "STRUCTOGLAS FRFR" - "ALMOND" MARLITE "STANDARD FRP" - "IVORY" GLASTEEL "GLASLINER FRP" - "IVORY" CRANE COMPOSITES (KEMLITE) "FIRE-X GLASBORD" - "COLONIAL WHITE"
- FRP-2 SEQUENTIA "STRUCTOGLAS FRFR" - "WHITE" MARLITE "STANDARD FRP" - "WHITE" GLASTEEL "GLASLINER FRP" - "BRIGHT WHITE" CRANE COMPOSITES (KEMLITE) "FIRE-X GLASBORD" - "WHITE"
- FRP-3 SEQUENTIA "STRUCTOGLAS FRFR" - "GRAY" MARLITE "STANDARD FRP" - "LIGHT GRAY" GLASTEEL "GLASLINER FRP" - "LIGHT GRAY" CRANE COMPOSITES (KEMLITE) "FIRE-X GLASBORD" - "PEARL GRAY"
- FRP-EX EXISTING FRP PANELS TO REMAIN
- FRP-MA NEW FRP PANELS TO MATCH EXISTING

CW- COOLER WALL/FREEZER PANEL FINISH
- CW-A COOLER WALL/FREEZER PANEL - EMBOSSED ALUMINUM FINISH
- CW-S COOLER WALL/FREEZER PANEL - STAINLESS STEEL FINISH
- CW-W COOLER WALL/FREEZER PANEL - WHITE FINISH
- CW-EX COOLER WALL/FREEZER PANEL - EXISTING TO REMAIN

METAL FINISHES
- SS-1 STAINLESS STEEL
- SS-EX EXISTING STAINLESS STEEL FINISH TO REMAIN
- GL-1 GALVANIZED STEEL

CERAMIC TILE
- TP- / FT- CERAMIC & FLOOR TILE PATTERN - SEE CORRESPONDING DETAIL IN PUBLIX TILE PATTERN MANUAL AT https://app.box.com/s/0cjp4umwkdf54weq66ud
- TP-EX EXISTING CERAMIC TILE TO REMAIN
- TP-MA NEW CERAMIC TILE TO MATCH EXISTING

WALL BASE
- VB-1 VINYL BASE- 6" COVED "JOHNSONITE #49 BEIGE" OR EQUAL
- VB-2 VINYL BASE- 4" COVED (MEDIUM GREY)
- VB-3 VINYL BASE- 6" COVED (MEDIUM GREY)
- WB-1 WOOD BASE- 4" (MEDIUM GREY)
- MB-1 NEW 6" MMA BASE
- SS-B STAINLESS STEEL BASE- 6" COVED
- NB-MA NEW BASE TO MATCH EXISITING ADJACENT

MISCELLANEOUS
- TLP-1 ALL TOILET PARTITIONS TO BE: SCRANTON "PARCHMENT" OR GLOBAL "CREAM" OR MILLS/BRADLEY "LINEN" OR AMPCO "TOFFEE"
- WD-1 TONGUE AND GROOVE PLANKING - ½" THICK BY 4" WIDE, V-JOINT LONGLEAF SOUTHERN PINE, S4S FINISH - MINWAX WOOD FINISH "GOLDEN PECAN 245"
- WD-2 (NOT USED)
- WC-EX EXISTING WALL COVERING TO REMAIN
- QZ-1 QUARTZ RESIN SOLID SURFACE - CAMBRIA, DESERT COLLECTION, CHERRYBROOK (3CM THICK - MITRED EDGE)
- AM-1 ACCENT MATERIAL PROVIDED BY PUBLIX, SEE PUBLIX REPRESENTATIVE FOR MORE INFORMATION
- FROST FROSTED GLASS DECORATIVE FILM - 3M FASARA GLASS FINISHES - CIELO
- PP-1 PAINTED PLYWOOD - SHERWIN WILLIAMS SW 6524 LAZY GRAY
- WV- SERVICE DEPARTMENT WALL VINYL ACCENT BAND (OF/OI) - SEE PUBLIX REPRESENTATIVE FOR MORE INFORMATION.
- WV-MT WV-SF WV-PR WV-BK WV-DL WV-VE

NOTES:
1. NOT ALL COLORS OR FINISHES MAY BE USED ON THIS PROTOTYPE
2. FOR FLOOR FINISHES, SEE SHEET A-1A.
3. INTERIOR PAINTS FOR SALES AREA WALL SURFACES ABOVE 8' ARE TO BE "FLAT FINISH"; ALL OTHER SURFACES TO BE SEMI-GLOSS SATIN FINISH.
4. APPLY BLOCK FILLER TO ALL MASONRY TO RECEIVE PAINT.
5. ALL SURFACES BEHIND CASES, WALK-IN COOLER, OR FREEZERS SHALL JUST RECEIVE PRIMER OR BLOCK FILLER. ALL EXPOSED SURFACES ABOVE THE CASES, WALK-IN COOLER, OR FREEZERS SHALL ALSO RECEIVE THE FINISH COAT OF PAINT.
6. IN RECEIVING/STORAGE, A LINE 2" WIDE OF SW B-66R38 SAFETY RED SHALL BE PAINTED AT A HEIGHT OF 12'-0" (TOP OF LINE) ON WALLS WHERE STORAGE OCCURS. ABOVE THIS LINE WILL BE STENCILED, IN 3" CAPITAL LETTERS, "NO STORAGE ABOVE THIS LINE."
7. PAINT ALL EXPOSED UTILITY DROPS SUCH AS PLUMBING LINES, REFRIGERATION LINES, ELECTRICAL CONDUIT, DUCTS AND COLUMNS TO MATCH ADJACENT WALL SURFACE. WHEN MORE THAN ONE COLOR IS USED ON WALL, MATCH COLOR CHANGES AT EXACT SAME HEIGHTS.

NOTE:
ALL GAS PIPING TO BE PAINTED SAFETY YELLOW

Publix® SUPER MARKETS

CORPORATE OFFICES, FACILITIES DESIGN
BOX 407, LAKELAND, FL 33802
(863) 680-5295
PHYSICAL ADDRESS:
3300 PUBLIX CORPORATE PARKWAY
LAKELAND, FL 33811-3311

PUBLIX FACILITIES DESIGN DEPARTMENT
DAVID ... BEE, AIA
ARCHITECT ... 91318
DAVID ...
ARCHITECT - FL. REG. ... GA. REG. ... SC. REG. ... AL. REG. ... TN. REG. ...497 NC. REG. ...432 VA. REG. ...0401017097
JOHN ... ENS, PE
CIVIL/STRUCTURAL - FL. REG. 45277 GA. REG. 020251 SC. REG. 16340 AL. REG. 20382 TN. REG. 101507
PAUL C. HARMAN, PE
STRUCTURAL - FL. REG. 51959 GA. REG. 27740 SC. REG. 21754 AL. REG. 24905 TN. REG. 107882 NC. REG. 39673 VA. REG. 0402055022
JOHN J. CARAMALIS, PE
MECHANICAL - FL. REG. 43889 GA. REG. 021246 SC. REG. 16521 AL. REG. 20581 TN. REG. 108507 VA. REG. 0402055478
ANTHONY CLEMENTI, PE
MECHANICAL - FL. REG. 54781 GA. REG.31882 SC. REG. 25591 AL. REG. 28469 TN. REG. 111382 NC. REG. 039664 VA. REG. 0402056137
RAYMOND J. SIRIANNI, PE
ELECTRICAL - FL. REG. 54085 GA. REG. 025636 SC. REG. 19743 AL. REG. 23065 TN. REG. 108038 NC. REG. 039963 VA. REG. 0402055379
NORMAN MEIER, PE
ELECTRICAL - FL. REG. 59422 GA. REG. 31492 SC. REG. 25290 AL. REG. 28079

© COPYRIGHT 2017 PUBLIX SUPER MARKETS, INC.

THESE CONSTRUCTION DOCUMENTS ARE THE PROPERTY OF PUBLIX SUPER MARKETS, INC. AND ARE NOT TO BE COPIED OR REUSED FOR ANY SPECIFIC BUILDING WITHOUT WRITTEN PERMISSION. THESE DRAWINGS SHALL NOT BE DUPLICATED WITHOUT PRIOR WRITTEN PERMISSION OF PUBLIX SUPER MARKETS, INC.

THE DESIGN INDICATED IN THESE CONSTRUCTION DOCUMENTS DOES, TO THE BEST OF MY KNOWLEDGE, INFORMATION, AND BELIEF, COMPLY WITH THE APPLICABLE MINIMUM BUILDING CODES

PLOT DATE: 25 AUG 2017

REVISION DATA:

1637
PUBLIX @ LAKE CROSSING

PLATT SPRINGS RD & HWY 6
LEXINGTON, LEXINGTON, SC

45.9.2
V0807-2017
SIENNA - LITE

FINISHES & COLORS PLAN AND INTERIOR ELEVATIONS

SCALE: AS NOTED

A-8

Order Plans @ WWW.LDDLine.com