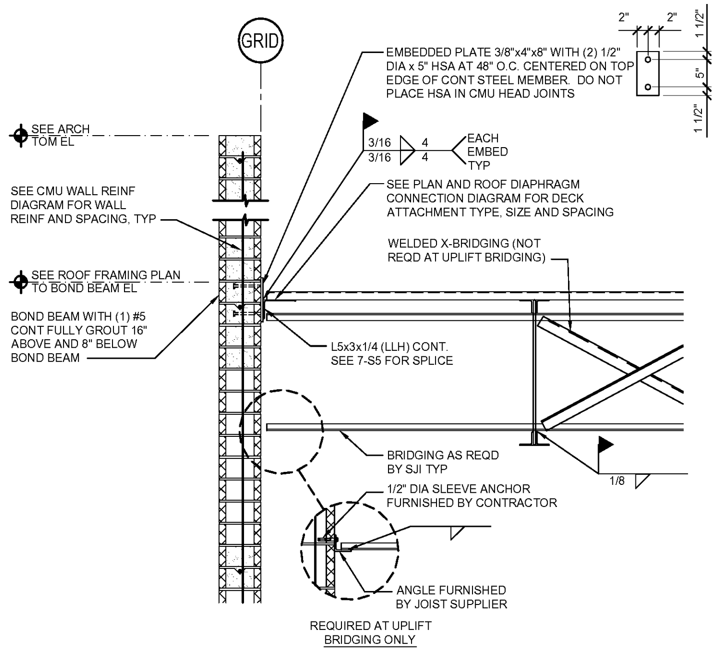

1 / S5 SIDE WALL SECTION
SCALE: 3/4" = 1'-0"

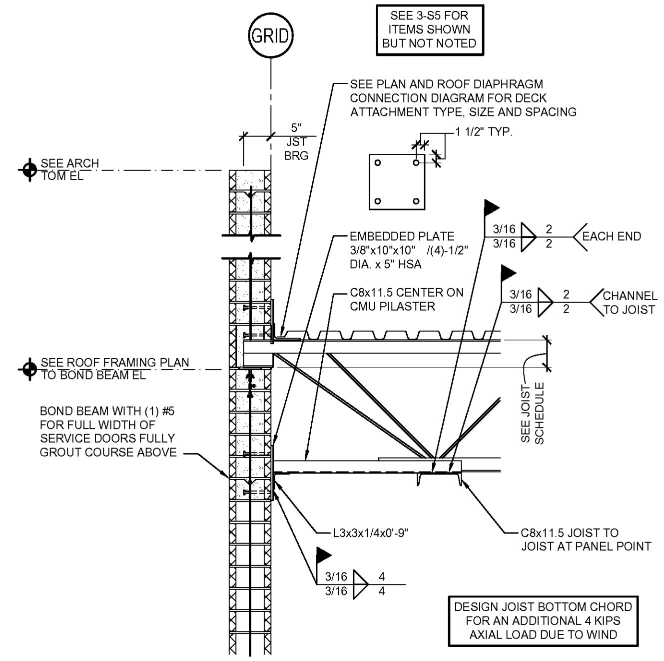

2 / S5 FRONT WALL SECTION
SCALE: 3/4" = 1'-0"

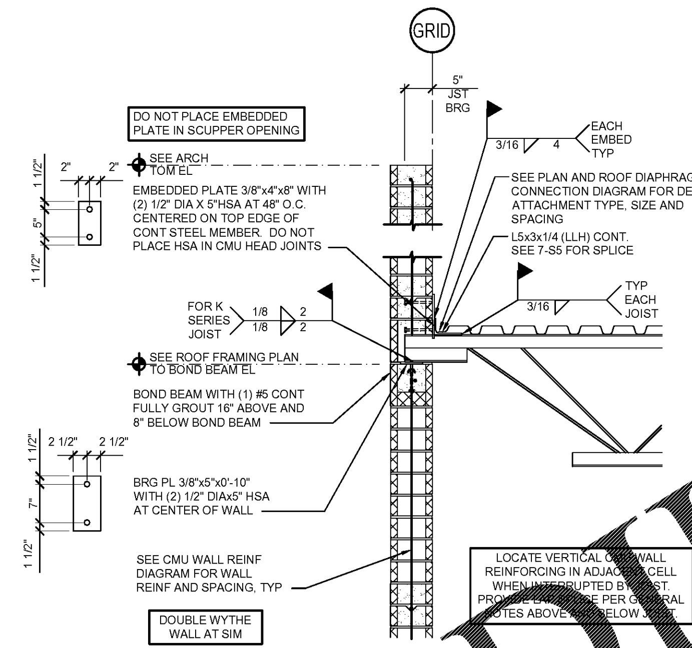

3 / S5 FRONT AND REAR WALL SECTION
SCALE: 3/4" = 1'-0"

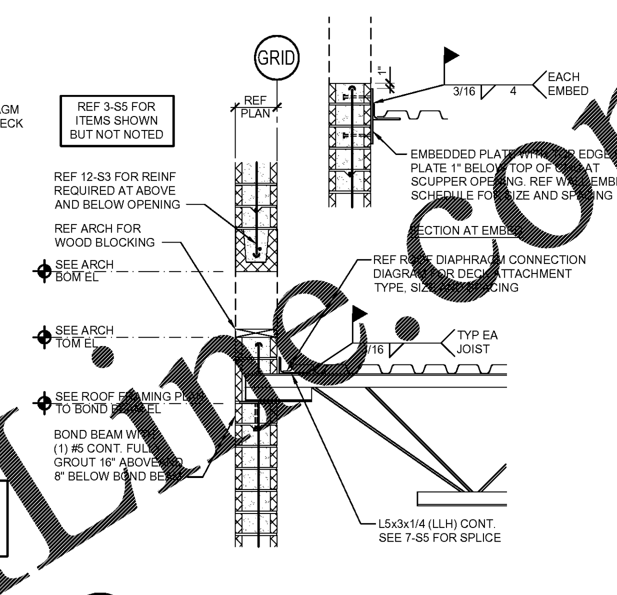

4 / S5 REAR WALL SECTION
SCALE: 3/4" = 1'-0"

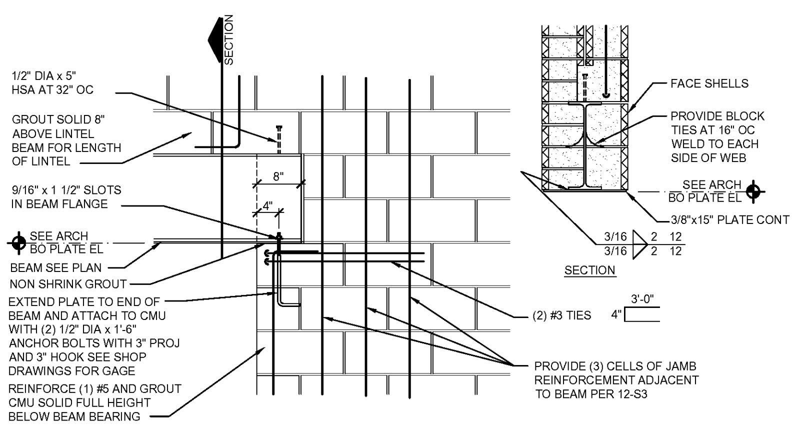

5 / S5 BEAM BEARING SECTION
SCALE: 3/4" = 1'-0"

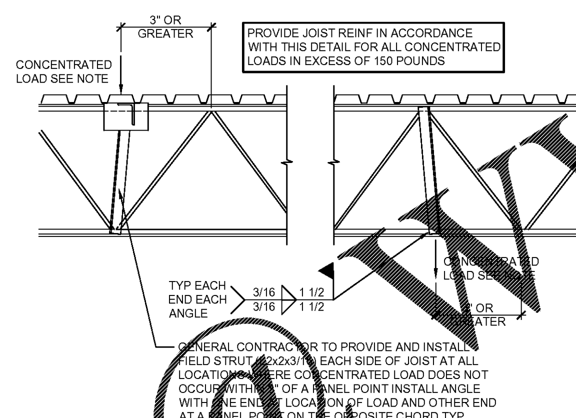

6 / S5 JOIST REINFORCING
SCALE: 3/4" = 1'-0"

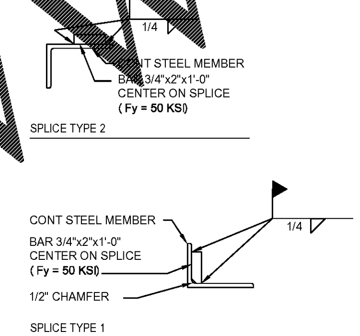

7 / S5 DIAPHRAGM CHORD SPLICE DETAILS
SCALE: 3/4" = 1'-0"

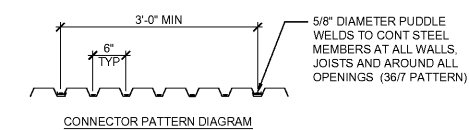

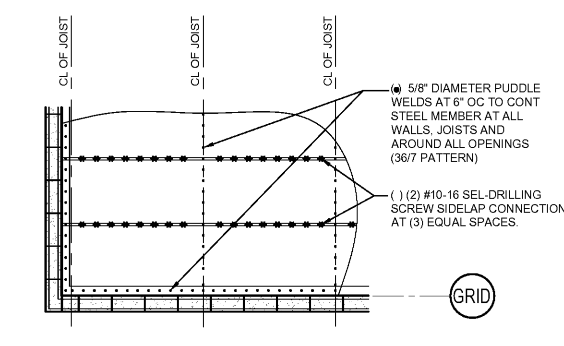

8 / S5 ROOF DIAPHRAGM CONNECTION DIAGRAM
SCALE: 3/4" = 1'-0"

NOTES:
1. INSTALL STRUCTURAL CURBS, HEADERS, AND FRAMES AND WELD TO SUPPORT STEEL BEFORE DECK IS PLACED.
2. ADJUST LOCATION OF RTU SO CURB FALLS WITHIN 3 INCHES OF JOIST PANEL POINTS. IF CURB IS MORE THAN 3 INCHES FROM PANEL POINT ADD REINFORCING PER JOIST REINFORCING DETAIL. (6-S5)
3. GENERAL CONTRACTOR SHALL COORDINATE RTU DIMENSIONS AND FRAMING LOCATIONS WITH THE STEEL FABRICATOR, MECHANICAL AND ERECTION SUBCONTRACTORS.
4. HEADERS ARE REQUIRED FOR STRUCTURAL CURBS WHEN THE CURB DOES NOT SPAN BETWEEN TWO JOISTS OR THE CURB CANTILEVERS MORE THAN TWO FEET OVER THE JOIST.
5. SEE DETAIL 1 FOR CONNECTION OF DECK TO CURB.
6. DO NOT INSTALL STRUCTURAL CURBS ON TOP OF DECK.
7. SEE SPECIFICATIONS AND MECHANICAL ROOFTOP HVAC UNIT SCHEDULES FOR RTU ANCHORAGE.

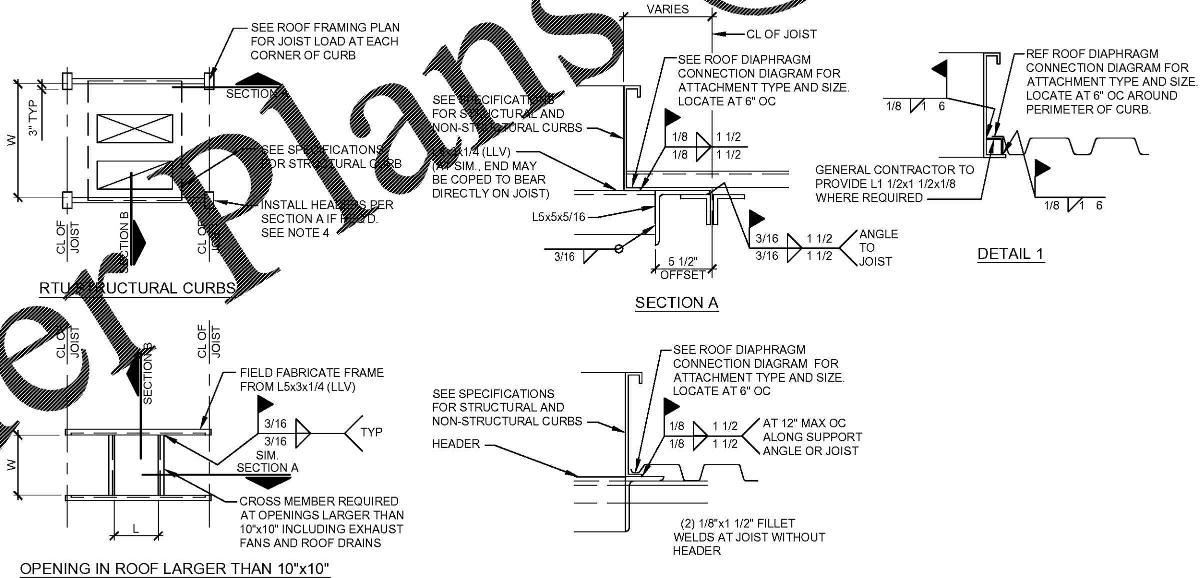

9 / S5 RTU FRAMING SUPPORT PLAN
N.T.S.

Aug 09, 2017 – 8:48am – USER Randall Rice
\\struct-server\volume\BSRO\1711203 – Williamsburg, VA\Struct_ER_L_S5.dwg

Order Plans @ www.LDLine.com

CARRIE JANE JOHNSON, P.E.
ENGINEER OF RECORD
200 EAST MATHEW BRADY STREET
TULSA, OKLAHOMA 74103-2012
918 584-5858, FAX 918 584-8689

Firestone COMPLETE AUTO CARE since 1926

THIS DRAWING IS THE PROPERTY OF BRIDGESTONE RETAIL OPERATIONS, LLC AND IS LOANED ON THE EXPRESS CONDITION THAT IT IS NOT TO BE USED IN ANY WAY DELETERIOUS TO THE INTERESTS OF BRIDGESTONE RETAIL OPERATIONS, LLC. THE ACCEPTANCE OF THIS DRAWING WILL BE CONSTRUED AS AN ACCEPTANCE OF THE FOREGOING CONDITION AND AS ADMISSION TO THE EXCLUSIVE OWNERSHIP IN AND TO THE DRAWING BY BRIDGESTONE RETAIL OPERATIONS, LLC.

STIPULATION OF REUSE
THIS DRAWING WAS PREPARED FOR USE ON A SPECIFIC SITE AT WILLIAMSBURG, VA CONTEMPORANEOUSLY WITH ITS ISSUE DATE ON 08/10/2017 AND IT IS NOT SUITABLE FOR USE ON A DIFFERENT PROJECT SITE OR AT A LATER TIME. USE OF THIS DRAWING FOR REFERENCE OR EXAMPLE ON ANOTHER PROJECT REQUIRES THE SERVICES OF PROPERLY LICENSED ARCHITECTS AND ENGINEERS. REPRODUCTION OF THIS DRAWING FOR REUSE ON ANOTHER PROJECT IS NOT AUTHORIZED AND MAY BE CONTRARY TO THE LAW.

NEW FCAC STORE
2015 - JUNE- ER - RIGHT
1900 RICHMOND ROAD
WILLIAMSBURG, VA

ISSUE BLOCK

PROPERTY NO.:	167739
6 DIGIT NO.:	785533
4 DIGIT NO.:	6868
AOR PROJECT NUMBER:	1655B14
TO PERMIT: DATE:	08/10/17
TO BID: DATE:	TBD
DRAWN BY:	JRR
CHECKED BY:	MG/TJ

SHEET TITLE:
FRAMING DETAILS

SHEET NUMBER:
S5