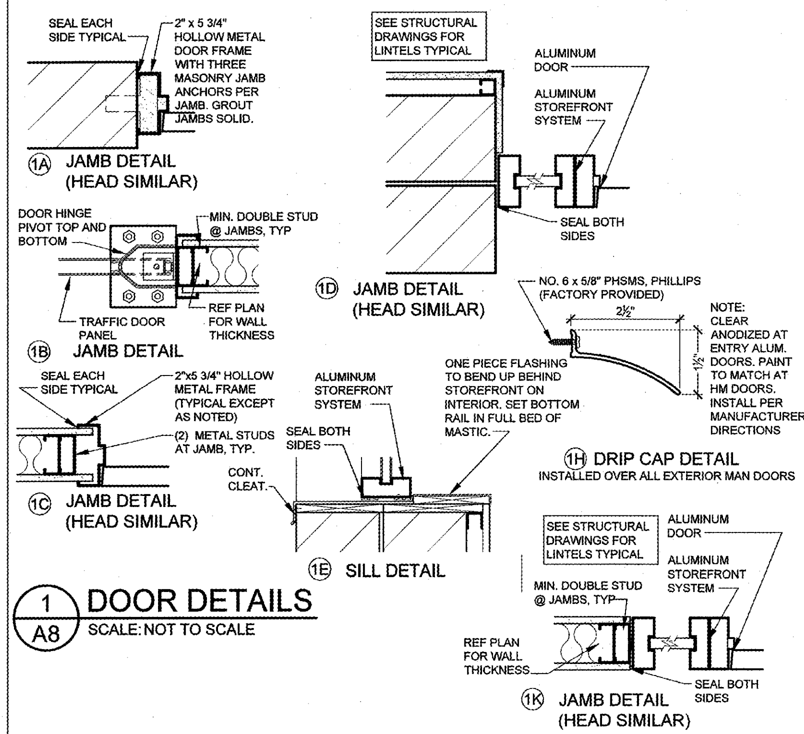

1 / A8 DOOR DETAILS
SCALE: NOT TO SCALE

DOOR SCHEDULE

NOTE: CONTRACTOR TO FURNISH AND INSTALL ALL DOORS, DOOR FRAMES, SIGNS AND HARDWARE.

DOOR							FRAME			LABEL	SIGN	DETAIL	REMARKS
MARK	ROOM NAME	TYPE	QTY	SIZE W x H x T	MAT'L.	FINISH	MAT'L.	FINISH	TYPE	"UL"			
01	CUSTOMER SHOWROOM	F	1	3'-0" x 7'-0" x 1 3/4"	AL	CLEAR ANODIZED	AL	CLEAR ANODIZED	P	-	EXIT	1-D/A8	SEE-D04, D14, D15 & D17
02	CUSTOMER SHOWROOM	F	1	3'-0" x 7'-0" x 1 3/4"	AL	CLEAR ANODIZED	AL	CLEAR ANODIZED	P	-	-	1-K/A8	SEE-D04
03	OFFICE	H	1	3'-0" x 7'-0" x 1 3/4"	HM	PT-10 (OFFICE) PT-2 (SHOWROOM)	HM	PT-10 (OFFICE) PT-2 (SHOWROOM)	P	-	OFFICE	1-C/A8	SEE-D06, D12, D15
04	UNISEX TOILET	G	1	3'-0" x 7'-0" x 1 3/4"	HM	PT-10 (UNISEX TOILET) PT-1 (SHOWROOM)	HM	PT-10 (UNISEX TOILET) PT-1 (SHOWROOM)	P	-	REST ROOM	1-C/A8	SEE-D10, D15
05	NOT USED												
06	UTILITY AREA	L	1	3'-0" x 7'-0" - TRAFFIC	PE	MANUFACTURER'S GRAY	HM-NO STOP	PT-10 (UTILITY AREA) PT-11 (SERVICE BAYS)	P	-	BREAKROOM	1-B/A8	SEE-D06, D07, D08, D09, & D15
07	SHOP TOILET	G	1	3'-0" x 7'-0" x 1 3/4"	HM	PT-10	HM	PT-10	P	-	SHOP REST ROOM	1-C/A8	SEE- D10 & D15
08	SPRINKER RISER	G	1	3'-0" x 7'-0" x 1 3/4"	HM	PT-10 (SPRINKLER) EXTERIOR - SEE A4	HM	PT-10 (SPRINKLER) EXTERIOR - SEE A4	M	-	SPRINKLER RISER	1-A/A8	SEE-D01
09	USED INVENTORY	G	1	4'-0" x 7'-0" x 1 3/4"	HM	PT-11 (USED INVENTORY) EXTERIOR - SEE A4	HM	PT-11 (USED INVENTORY) EXTERIOR - SEE A4	M	-	-	1-A/A8	SEE-D01
10	INVENTORY	G	1	4'-0" x 7'-0" x 1 3/4"	HM	PT-11 (INVENTORY) EXTERIOR - SEE A4	HM	PT-11 (INVENTORY) EXTERIOR - SEE A4	M	-	-	1-A/A8	SEE-D01
11	SERVICE BAY	J	1	10'-0" x 10'-0" x 1 3/4"	-	PRE-FINISHED	-	-	-	-	-	15/A7	SEE-D01, D02, D03, D04, & D09
12	SERVICE BAY	J	1	10'-0" x 10'-0" x 1 3/4"	-	PRE-FINISHED	-	-	-	-	-	15/A7	SEE-D01, D02, D03, D04, & D09
13	SERVICE BAY	J	1	10'-0" x 10'-0" x 1 3/4"	-	PRE-FINISHED	-	-	-	-	-	15/A7	SEE-D01, D02, D03, D04 & D09
14	SERVICE BAY	J	1	10'-0" x 10'-0" x 1 3/4"	-	PRE-FINISHED	-	-	-	-	-	15/A7	SEE-D01, D02, D03, D04 & D09
15	SERVICE BAY	J	1	10'-0" x 10'-0" x 1 3/4"	-	PRE-FINISHED	-	-	-	-	-	15/A7	SEE-D01, D02, D03, D04 & D09
16	SERVICE BAY	J	1	10'-0" x 10'-0" x 1 3/4"	-	PRE-FINISHED	-	-	-	-	-	15/A7	SEE-D01, D02, D03, D04 & D09
17	SERVICE BAY	J	1	10'-0" x 10'-0" x 1 3/4"	-	PRE-FINISHED	-	-	-	-	-	15/A7	SEE-D01, D02, D03, D04 & D09
18	NOT USED												
19	NOT USED												
20	SERVICE BAY	J	1	10'-0" x 12'-0" x 1 3/4"	-	PRE-FINISHED	-	-	-	-	-	15/A7	SEE-D01, D02, D03, D04 & D09
21	SERVICE BAY	K	1	3'-0" x 7'-0" x 1 3/4"	HM	PT-11 (SERVICE BAYS) EXTERIOR - SEE A4	HM	PT-11 (SERVICE BAYS) EXTERIOR - SEE A4	M	-	EXIT	1-A/A8	SEE-D01, D06, D13 & D15
22	SERVICE BAY	K	1	3'-0" x 7'-0" x 1 3/4"	HM	PT-11 (SERVICE BAYS) EXTERIOR - SEE A4	HM	PT-11 (SERVICE BAYS) EXTERIOR - SEE A4	M	-	EXIT	1-A/A8	SEE-D01, D06, D13 & D15
23	NOT USED												
24	NOT USED												
25	NOT USED												
26	NOT USED												
27	NOT USED												
28	NOT USED												
29	NOT USED												

DOOR SCHEDULE NOTES

GC PACKAGE AVAILIBLE FROM NATIONAL VENDER GIRTMAN & ASSOC. (615)-350-6000

GENERAL NOTES:
1. ALL THRESHOLDS AT EXTERIOR DOORS TO BE SET IN FULL BED OF MASTIC.
2. ALL HARDWARE SHALL CONFORM WITH ICC 117 AND GOVERNING CODES.

- D01. INSULATE EXTERIOR DOORS AS REQUIRED BY CRITERIA IN SPECIFICATIONS.
- D02. TRACK AND HARDWARE BY O.H. DOOR MANUFACTURER.
- D03. ACTUAL DOOR SIZE IS 2" WIDER AND 1" HIGHER THAN DOOR OPENING (PROVIDE FOR 1" LAP AT HEAD AND JAMBS)
- D04. HARDWARE BY DOOR MANUFACTURER REFER TO SPECIFICATIONS.
- D05. NOT USED
- D06. PROVIDE DOOR LITE REFER DOOR TYPES.
- D07. FIELD VERIFY DOOR SIZE PRIOR TO ORDERING DOOR.
- D08. DOOR COLOR GRAY.
- D09. BRUSH EDGE SEALS BY DOOR MANUFACTURER.
- D10. UNDERCUT DOOR 1/2".
- D11. NOT USED
- D12. PROVIDE LOUVER IN BASE OF DOOR PER DOOR TYPE.
- D13. DOOR & FRAME TO BE PAINTED TO MATCH ADJACENT WALL UNO.
- D14. LOCKING HARDWARE ON ENTRY DOOR TO HAVE KEYED ACCESS FROM THE EXTERIOR AND THUMB TURNS ON INTERIOR.
- D15. GC. TO PROVIDE TACTILE DOOR SIGNAGE AS NOTED TO COMPLY WITH ADA.
- D16. NOT USED
- D17. PROVIDE PLATE REINFORCEMENT FOR HOLD OPEN AT DOOR FRAME AND ON THE EXTERIOR OF THE ALUMINUM DOORS WITH THROUGH BOLTS FOR CRASH CHAIN.
- D18. NOT USED
- D19. G.C. TO PROVIDE & INSTALL SLIDING DOORS , FRAME, TRIM, AND HARDWARE. COORDINATE WITH DOOR HARDWARE SPECIFICATIONS.
- D20. NOT USED
- D21. NOT USED

DOOR SCHEDULE MATERIAL KEY

MARK	DESCRIPTION
AL	ALUMINUM
CL	CHAIN LINK
HM	HOLLOW METAL
PE	POLYETHYLENE
WD	WOOD

ROOM SCHEDULE MATERIAL KEY

MARK	DESCRIPTION
CONC.	CONCRETE
CMU	CONCRETE MASONRY UNIT
GYP. BD.	GYPSUM BOARD
O.T.S.	OPEN TO STURUCTURE
PLYWD.	PLYWOOD
RB	RESILIENT BASE
VCT	VINYL COMPOSITON TILE
CPT	CARPET TILE

ROOM ORIENTATION KEY

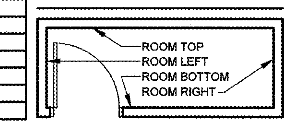

ROOM FINISH SCHEDULE

ROOM NO.	ROOM NAME	FLOOR		WALLS												CEILING			NOTES
		MAT'L	FIN.	LEFT	FIN.	BASE	TOP	FIN.	BASE	RIGHT	FIN.	BASE	BOTTOM	FIN.	BASE	MAT'L	FIN.	HEIGHT	
100	CUSTOMER SHOWROOM	CONC.	POLISHED CPT	GYP. BD.	SEE F2	RB	GYP. BD.	SEE F2	RB	GYP. BD.	SEE F2	RB	GYP. BD.	SEE F2	RB	O.T.S.	PT-7	-	SEE RF2
101	'IT' CLOSET	CONC.	POLISHED	GYP. BD.	PT-7 PT-10	RB	GYP. BD.	PT-7 PT-10	RB	GYP. BD.	PT-7 PT-10	RB	GYP. BD.	PT-7 PT-10	RB	O.T.S.	PT-7	-	SEE RF2, RF8
102	OFFICE	CONC.	POLISHED	GYP. BD.	PT-7 PT-10	RB	GYP. BD.	PT-7 PT-10	RB	GYP. BD.	PT-7 PT-10	RB	GYP. BD.	PT-7 PT-10	RB	O.T.S.	PT-7	-	SEE RF2, RF8
103	UNISEX TOILET	CONC.	POLISHED	GYP. BD./ FRP	PT-10	RB	GYP. BD./ FRP	PT-10	RB	GYP. BD./ FRP	PT-10	RB	GYP. BD./ FRP	PT-10	RB	GYP. BD.	PT-6	8'-0"	SEE RF3, RF4
104	CLEAN UP AREA	CONC.	SEALED	GYP. BD./ FRP	PT-7 PT-10	RB	CMU	PT-7 PT-10	-	OPEN	-	-	GYP. BD./ FRP	PT-7 PT-10	RB	O.T.S.	PT-7	-	SEE RF2, RF3, RF6, RF8
105	BREAK AREA	CONC.	SEALED	OPEN	-	-	CMU	PT-7 PT-10	-	OPEN	-	-	GYP. BD./ FRP	PT-7 PT-10	RB	O.T.S.	PT-7	-	SEE RF2, RF3, RF6, RF8
106	CHANGING AREA	CONC.	SEALED	OPEN	-	-	CMU	PT-7 PT-10	-	GYP. BD./ FRP	PT-7 PT-10	RB	GYP. BD./ FRP	PT-7 PT-10	RB	O.T.S.	PT-7	-	SEE RF2, RF3, RF6, RF8
107	SHOP TOILET	CONC.	POLISHED	GYP. BD/ FRP	PT-10	RB	GYP. BD/ FRP	PT-10	RB	GYP. BD/ FRP	PT-10	RB	GYP. BD./ FRP	PT-10	RB	GYP. BD.	PT-6	8'-0"	SEE RF3, RF4
108	SERVICE BAYS	CONC.	SEALED	CMU	PT-6 PT-11	-	PLYWD.	PT-6 PT-11	-	GYP. BD.	PT-6 PT-11	RB	CMU	PT-6 PT-11	-	O.T.S.	PT-6	-	SEE RF1, RF2, RF5
109	INVENTORY	CONC.	SEALED	PLYWD./ CMU	PT-6 PT-7	-	CMU	PT-6 PT-7	-	PLYWD/ GYP. BD	PT-6 PT-7	RB	PLYWD.	PT-6 PT-7	-	O.T.S.	PT-6	-	SEE RF5, RF7
110	USED INVENTORY	CONC.	SEALED	CMU	PT-7	-	PLYWD.	PT-7	-	PLYWD.	PT-7	-	PLYWD.	PT-7	-	O.T.S.	PT-6	-	-
111	UTILITY AREA	CONC.	SEALED	GYP. BD./ PLYWD.	PT-7 PT-10	RB	CMU/ PLYWD.	PT-7 PT-10	-	OPEN / FRP/ GYP. BD.	PT-7 PT-10	RB	GYP. BD./ FRP	PT-7 PT-10	RB	O.T.S.	PT-7	-	SEE RF2, RF3, RF5, RF6, RF8
112	SPRINKLER RISER	CONC.	SEALED	CMU	PT-10	-	PLYWD.	PT-10	-	PLYWD.	PT-10	-	PLYWD.	PT-10	-	O.T.S.	PT-6	-	-

ROOM FINISH REMARKS

- RF1. SERVICE AREA PAINT SCHEME
  - PAINT CEILING PER ROOM FINISH SCHEDULE.
  - PAINT FROM DIMENSION: FLOOR TO 10'-0" PT-11
  - PAINT FROM DIMENSION: 10'-0" TO STRUCTURE PT-6
- RF2. PAINT ALL EXPOSED CONDUITS, J-BOXES AND EXPOSED SURFACES VISIBLE TO PUBLIC VIEW. PIPING FOR OIL, AIR, AND SPRINKLER SYSTEMS ARE NOT TO BE PAINTED. DUCT WORK TO BE PAINT PT-7.
- RF3. FRP COLOR: FAWN BROWN #809 SANDSTONE FINISH (WALL PRIMER REQUIRED)
- RF4. USE SHERWIN WILLIAMS WATER BASED CATALYZED EPOXY FOR WALLS. THIS IS A 2-PART PAINT WITH (PART A# / PART B#) = (B70W0211 w/ epoxy hardener B60V25)
- RF5. PROVIDE YELLOW SAFETY STRIPING AS SHOWN ON PLANS.
- RF6. PAINT ABOVE FRP AT 10'-0" TO STRUCTURE PT-7.
- RF7. PAINT FROM DIMENSION: FLOOR TO 4'-0" PT-7, PAINT FROM DIMENSION: 4'-0" TO STRUCTURE PT-6
- RF8. PAINT FROM DIMENSION: FLOOR TO 10'-0" PT-10, PAINT FROM DIMENSION: 10'-0" TO STRUCTURE PT-7

PAINT COLOR SCHEDULE:

NOTE: ALL COLOR NAMES INDICATED ARE FOR SELECTION PURPOSES ONLY. SEE PAINT SPECS FOR SPECIFIC REQUIREMENTS

DESCRIPTION: (ALL "SHERWIN / WILLIAMS" NUMBERS 'SW' & 'CC'-CUSTOM COLORS)

KEY:	COLOR:	S.W. #
PT-1	"MEGA GREIGE"	-SW7031
PT-2	"HARBOR BLUE"	-SWFCAC1
PT-3	"PURE WHITE"	-SW7005
PT-4	"BRANDYWINE"	-SW7710
PT-5	"SAFETY RED"	-SW4081
PT-6	"ANTIQUE WHITE"	-SW6119
PT-7	"BLACK"	-SW4090
PT-8	"SAFETY YELLOW"	-SW4084
PT-9	"ROW HOUSE TAN"	-SW7689
PT-10	"LATTE"	-SW6108
PT-11	"WARM STONE"	-SW7032
PT-12	"TIMSON TAN"	-BM CW-140
PT-13	"PATIENCE"	-SW7555
PT-14	"CHINA RED"	-BM CW-310
PT-21	"REDWOOD"	-SW3501
PT-22	"ALMOND ROCA"	-SW9105

1. PLACE RUBBER GASKET STRIP (FULL HEIGHT)IN EACH VERTICAL MULLION TO ACT AS A STOP FOR SLIDING PANE.
2. AT SLIDING PANES PROVIDE METAL C CHANNEL FRAME W/ RUBBER GLAZING GASKETS ON ALL (4) SIDES. STOP VERTICAL CHANNELS SHORT OF TOP AND BOTTOM AND RUN HORIZONTAL CHANNELS OVER TOP TO ENDS OF GLAZING. ENSURE NO EXPOSED METAL EDGES OR SHARP CORNERS. MITERED CORNERS NOT ALLOWED.

ALL LOUVERS TO BE FLUSH MOUNTED

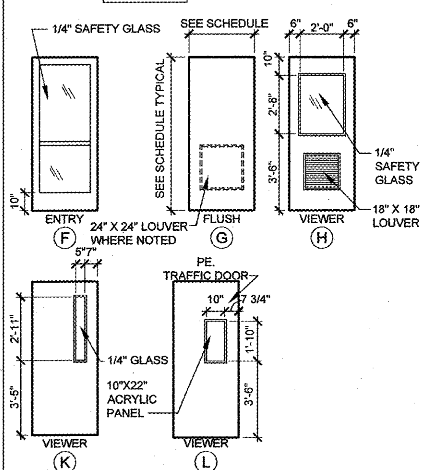

2 / A8 DOOR TYPES
SCALE: 1/4"=1'-0"

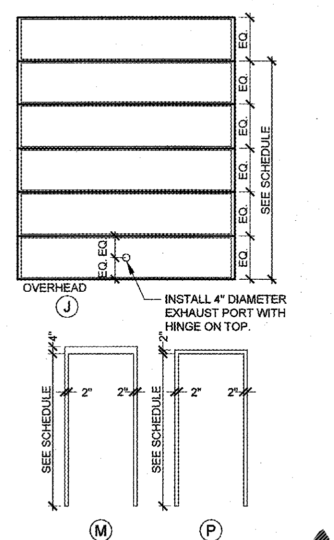

3 / A8 FRAMES TYPES
SCALE: 1/4"=1'-0"

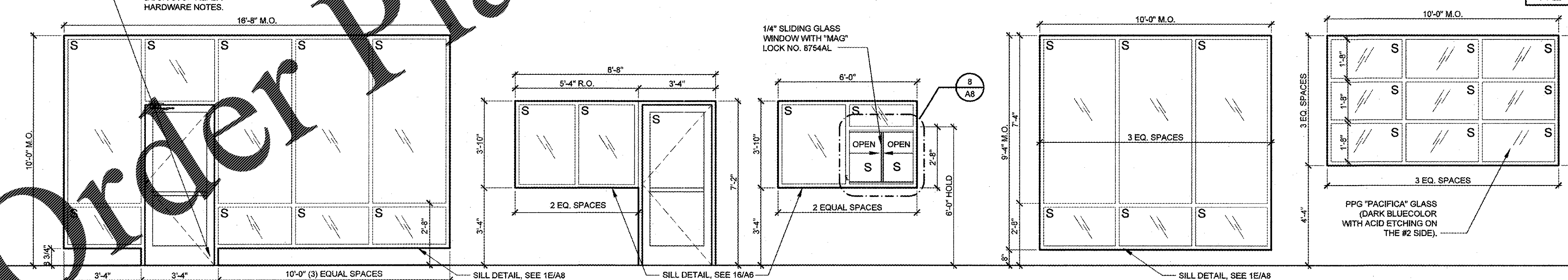

4 / A8 WINDOWS TYPES
SCALE: 3/8"=1'-0"

GENERAL NOTES:
1. ALL STOREFRONT & INTERIOR WINDOWS ARE TO BE FIELD VERIFIED PRIOR TO INSTALLATION BY G.C.
2. PROVIDE DOUBLE PANE INSULATED GLASS FOR ALL STOREFRONT LOCATIONS.
3. "S"-INDICATES SAFETY GLASS REQUIRED BY CODE. GC TO CONFIRM SAFETY GLAZING IS LABELED PER CODE.

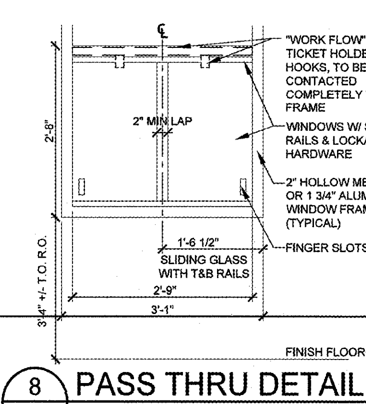

8 / A8 PASS THRU DETAIL
SCALE: 3/4"=1'-0"

SGA Design Group, P.C.
1437 South Boulder, Suite 550
Tulsa, Oklahoma 74119.3609
p: 918.587.8600
f: 918.587.8601
www.sgadesigngroup.com

Firestone COMPLETE AUTO CARE since 1926

THIS DRAWING IS THE PROPERTY OF BRIDGESTONE RETAIL OPERATIONS, LLC AND IS LOANED ON THE EXPRESS CONDITION THAT IT IS NOT TO BE USED IN ANY WAY DELETERIOUS TO THE INTERESTS OF BRIDGESTONE RETAIL OPERATIONS, LLC. THE ACCEPTANCE OF THIS DRAWING WILL BE CONSTRUED AS AN ACCEPTANCE OF THE FOREGOING CONDITION AND AS ADMISSION TO THE EXCLUSIVE OWNERSHIP IN AND TO THE DRAWING BY BRIDGESTONE RETAIL OPERATIONS, LLC.

STIPULATION OF REUSE
THIS DRAWING WAS PREPARED FOR USE ON A SPECIFIC SITE AT WILLIAMSBURG, VA CONTEMPORANEOUSLY WITH ITS ISSUE DATE ON 08/10/2017 AND IT IS NOT SUITABLE FOR USE ON A DIFFERENT PROJECT SITE OR AT A LATER TIME. USE OF THIS DRAWING FOR REFERENCE OR EXAMPLE ON ANOTHER PROJECT REQUIRES THE SERVICES OF PROPERLY LICENSED ARCHITECTS AND ENGINEERS. REPRODUCTION OF THIS DRAWING FOR REUSE ON ANOTHER PROJECT IS NOT AUTHORIZED AND MAY BE CONTRARY TO THE LAW.

NEW FCAC STORE
2015 - JUNE- ER - RIGHT
1900 RICHMOND ROAD
WILLIAMSBURG, VA

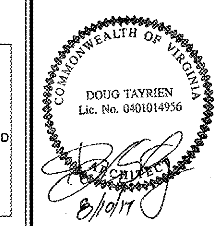

ISSUE BLOCK

PROPERTY NO.:	167739
6 DIGIT NO.:	785533
4 DIGIT NO.:	6868

AOR PROJECT NUMBER: 1655B14
TO PERMIT: DATE: 08/10/17
TO BID: DATE: TBD
DRAWN BY: JD
CHECKED BY: MGC

SHEET TITLE:
ROOM FINISH AND DOOR SCHEDULES

SHEET NUMBER:
A8

Order Plans @ WWW.LDDIline.com