RESTROOM SYMBOLS

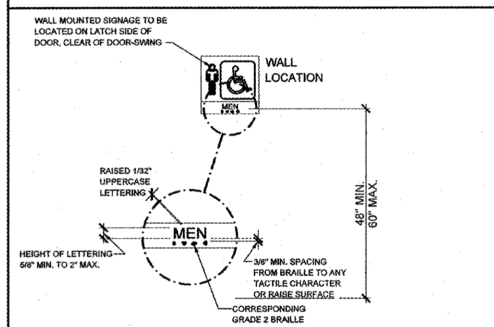

SIGNS & IDENTIFICATION

1. THE INTERNATIONAL SYMBOL OF ACCESSIBILITY SHALL BE THE STANDARD USED TO IDENTIFY FACILITIES THAT ARE ACCESSIBLE TO AND USABLE BY PHYSICALLY DISABLED PERSONS AS SET FORTH IN TITLE III AND AS SPECIFICALLY REQUIRED IN THIS SECTION
2. THE INTERNATIONAL SYMBOL OF ACCESSIBILITY SHALL CONSIST OF A WHITE FIGURE ON A BLUE BACKGROUND. THE BLUE SHALL BE EQUAL TO COLOR NO. 15090 IN FEDERAL STANDARD 599B. PICTOGRAMS AND THEIR FIELDS SHALL HAVE A NON-GLARE FINISH. PICTOGRAMS SHALL CONTRAST THEIR FIELDS, WITH EITHER A LIGHT PICTOGRAM ON A DARK FIELD OR A DARK PICTOGRAM ON A LIGHT FIELD.
3. FOR CHARACTER WIDTH, THE UPPERCASE LETTER "O" SHALL BE USED TO DETERMINE THE ALLOWABLE WIDTH OF ALL CHARACTERS OF A FONT. THE WIDTH OF THE UPPERCASE LETTER "O" OF THE FONT SHALL BE 55 PERCENT MINIMUM AND 110 PERCENT MAXIMUM OF THE HEIGHT OF THE UPPERCASE LETTER "I" OF THE FONT. (ICC A117.1-2009: 703.3.6) CHARACTER HEIGHT MEASURED FROM THE BASELINE OF THE CHARACTER SHALL BE 5/8" (16 MM) MINIMUM AND 2 INCHES (51 MM) MAXIMUM BASED ON THE HEIGHT OF THE UPPERCASE LETTER "I".
4. MINIMUM CHARACTER HEIGHT SHALL COMPLY WITH 2010 ADA TABLE 703.5.5. VIEWING DISTANCE SHALL BE MEASURED AS THE HORIZONTAL DISTANCE BETWEEN THE CHARACTER AND AN OBSTRUCTION PREVENTING FURTHER APPROACH TOWARDS THE SIGN. CHARACTER HEIGHT SHALL BE BASED ON THE UPPERCASE LETTER "I".
5. CHARACTERS AND SYMBOLS SHALL CONTRAST WITH THEIR BACKGROUND
6. WHEN RAISED CHARACTERS OR SYMBOLS ARE USED, THEY SHALL CONFORM TO THE FOLLOWING:

   A. LETTERS AND NUMBERS ON SIGNS SHALL BE RAISED 1/32" MINIMUM AND SHALL BE SANS-SERIF UPPERCASE CHARACTERS ACCOMPANIED BY GRADE 2 BRAILLE

   B. RAISED CHARACTERS OR SYMBOLS SHALL BE A MINIMUM OF 5/8" HIGH AND 2" MAXIMUM BASED ON THE HEIGHT OF THE UPPERCASE LETTER "I".

   C. PICTORIAL SYMBOL SIGNS (PICTOGRAMS) SHALL BE ACCOMPANIED BY THE EQUIVALENT VERBAL DESCRIPTION PLACED DIRECTLY BELOW THE PICTOGRAM. THE BORDER DIMENSION OF THE PICTOGRAM SHALL BE A MINIMUM OF 6" IN HEIGHT
7. CONTRACTED GRADE 2 BRAILLE SHALL BE USED WHEREVER BRAILLE SYMBOLS ARE SPECIFICALLY REQUIRED IN OTHER PORTIONS OF THESE REGULATIONS. DOTS SHALL BE 0.090" (2.3 MM) TO 0.100" (2.5 MM) ON CENTER IN EACH CELL WITH 0.241" (6.1 MM) TO 0.300" (7.6 MM) SPACE BETWEEN CELLS. DOTS SHALL BE RAISED A MINIMUM OF 0.025" (0.6 MM) TO 0.037" (0.9 MM) ABOVE THE BACKGROUND.
8. WHEN PERMANENT IDENTIFICATION IS PROVIDED FOR ROOMS AND SPACES, RAISED LETTERS SHALL BE ACCOMPANIED BY BRAILLE. SIGNS SHALL BE INSTALLED ON THE WALL ADJACENT TO THE LATCH SIDE OF THE DOOR. WHERE THERE IS NO WALL SPACE ON THE LATCH SIDE, INCLUDING DOUBLE LEAF DOORS, SIGNS SHALL BE PLACED ON THE NEAREST ADJACENT WALL, PREFERABLY ON THE RIGHT. MOUNTING HEIGHT SHALL BE LOCATED 48 INCHES (1220 MM) MINIMUM ABOVE THE FINISH FLOOR OR GROUND SURFACE, MEASURED FROM THE BASE OF THE LOWEST TACTILE CHARACTER AND 60 INCHES (1525 MM) MAXIMUM ABOVE THE FINISH FLOOR OR GROUND SURFACE, MEASURED FROM THE BASELINE OF THE HIGHEST TACTILE CHARACTER. WHERE A TACTILE SIGN IS PROVIDED AT A DOOR, THE SIGN SHALL BE LOCATED ALONGSIDE THE DOOR AT THE LATCH SIDE. WHERE A TACTILE SIGN IS PROVIDED AT DOUBLE DOORS WITH ONE ACTIVE LEAF, THE SIGN SHALL BE LOCATED ON THE INACTIVE LEAF. WHERE A TACTILE SIGN IS PROVIDED AT DOUBLE DOORS WITH TWO ACTIVE LEAFS, THE SIGN SHALL BE LOCATED TO THE RIGHT OF THE RIGHT HAND DOOR. WHERE THERE IS NO WALL SPACE AT THE LATCH SIDE OF A SINGLE DOOR OR AT THE RIGHT SIDE OF DOUBLE DOORS, SIGNS SHALL BE LOCATED ON THE NEAREST ADJACENT WALL. SIGNS CONTAINING TACTILE CHARACTERS SHALL BE LOCATED SO THAT A CLEAR FLOOR SPACE OF 18 INCHES (455 MM) MINIMUM BY 18 INCHES (455 MM) MINIMUM, CENTERED ON THE TACTILE CHARACTERS, IS PROVIDED BEYOND THE ARC OF ANY DOOR SWING BETWEEN THE CLOSED POSITION AND 45 DEGREE OPEN POSITION. EXCEPTION: SIGNS WITH TACTILE CHARACTERS SHALL BE PERMITTED ON THE PUSH SIDE OF DOORS WITH CLOSERS AND WITHOUT HOLD-OPEN DEVICES.

TACTILE EXIT SIGN

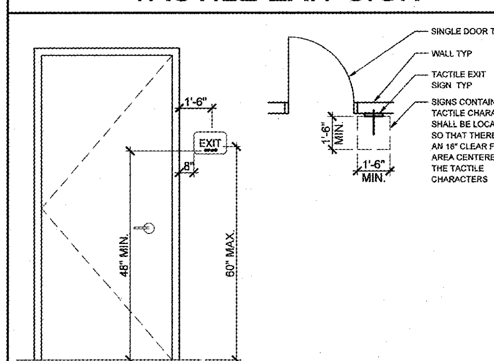

TACTILE SIGN REQUIREMENTS

1. A TACTILE SIGN STATING "EXIT" AND COMPLYING WITH ICC A117.1 SHALL BE PROVIDED ADJACENT TO EACH DOOR TO AN EXIT PASSAGEWAY AND THE EXIT DISCHARGE. REF DOOR SCHEDULE FOR LOCATIONS.
2. FOR CHARACTER WIDTH, THE UPPERCASE LETTER "O" SHALL BE USED TO DETERMINE THE ALLOWABLE WIDTH OF ALL CHARACTERS OF A FONT. THE WIDTH OF THE UPPERCASE LETTER "O" OF THE FONT SHALL BE 55 PERCENT MINIMUM AND 110 PERCENT MAXIMUM OF THE HEIGHT OF THE UPPERCASE LETTER "I" OF THE FONT. (ICC A117.1-2009: 703.3.6) CHARACTER HEIGHT MEASURED FROM THE BASELINE OF THE CHARACTER SHALL BE 5/8" (16 MM) MINIMUM AND 2 INCHES (51 MM) MAXIMUM BASED ON THE HEIGHT OF THE UPPERCASE LETTER "I".
3. CHARACTERS AND SYMBOLS SHALL CONTRAST WITH THEIR BACKGROUND
4. CHARACTERS SHALL CONFORM TO THE FOLLOWING:

   A. LETTERS AND NUMBERS ON SIGNS SHALL BE RAISED 1/32" MINIMUM AND SHALL BE SANS-SERIF UPPERCASE CHARACTERS ACCOMPANIED BY GRADE 2 BRAILLE

   B. RAISED CHARACTERS OR SYMBOLS SHALL BE A MINIMUM OF 5/8" HIGH AND 2" MAXIMUM OF 2"
5. CONTRACTED GRADE 2 BRAILLE SHALL BE USED. DOTS SHALL BE 0.090" (2.3 MM) TO 0.100" (2.5 MM) ON CENTER IN EACH CELL WITH 0.241" (6.1 MM) TO 0.300" (7.6 MM) SPACE BETWEEN CELLS. DOTS SHALL BE RAISED A MINIMUM OF 0.025" (0.6 MM) TO 0.037" (0.9 MM) ABOVE THE BACKGROUND.
6. SIGNS SHALL BE INSTALLED ON THE WALL ADJACENT TO THE LATCH SIDE OF THE DOOR. WHERE THERE IS NO WALL SPACE ON THE LATCH SIDE, INCLUDING DOUBLE LEAF DOORS, SIGNS SHALL BE PLACED ON THE NEAREST ADJACENT WALL, PREFERABLY ON THE RIGHT. MOUNTING HEIGHT SHALL BE LOCATED 48 INCHES (1220 MM) MINIMUM ABOVE THE FINISH FLOOR OR GROUND SURFACE, MEASURED FROM THE BASE OF THE LOWEST TACTILE CHARACTER AND 60 INCHES (1525 MM) MAXIMUM ABOVE THE FINISH FLOOR OR GROUND SURFACE, MEASURED FROM THE BASELINE OF THE HIGHEST TACTILE CHARACTER. WHERE A TACTILE SIGN IS PROVIDED AT A DOOR, THE SIGN SHALL BE LOCATED ALONGSIDE THE DOOR AT THE LATCH SIDE. WHERE A TACTILE SIGN IS PROVIDED AT DOUBLE DOORS WITH ONE ACTIVE LEAF, THE SIGN SHALL BE LOCATED ON THE INACTIVE LEAF. WHERE A TACTILE SIGN IS PROVIDED AT DOUBLE DOORS WITH TWO ACTIVE LEAFS, THE SIGN SHALL BE LOCATED TO THE RIGHT OF THE RIGHT HAND DOOR. WHERE THERE IS NO WALL SPACE AT THE LATCH SIDE OF A SINGLE DOOR OR AT THE RIGHT SIDE OF DOUBLE DOORS, SIGNS SHALL BE LOCATED ON THE NEAREST ADJACENT WALL. SIGNS CONTAINING TACTILE CHARACTERS SHALL BE LOCATED SO THAT A CLEAR FLOOR SPACE OF 18 INCHES (455 MM) MINIMUM BY 18 INCHES (455 MM) MINIMUM, CENTERED ON THE TACTILE CHARACTERS, IS PROVIDED BEYOND THE ARC OF ANY DOOR SWING BETWEEN THE CLOSED POSITION AND 45 DEGREE OPEN POSITION. EXCEPTION: SIGNS WITH TACTILE CHARACTERS SHALL BE PERMITTED ON THE PUSH SIDE OF DOORS WITH CLOSERS AND WITHOUT HOLD-OPEN DEVICES.

TACTILE EXIT SIGN LEGEND

REF:TACTILE SIGN REQUIREMENTS AND DIMENSIONS ABOVE FOR ACCESSIBLE SIGNAGE PLACEMENT

KEYNOTE	SIGNAGE
E (diamond)	EXIT

STRIPING CONDITIONS

STRIPING REQUIREMENTS: 4" WIDE PAINTED STRIPES YELLOW, REF. SPEC., AT 12" O.C. AT 45 DEG. ANGLE WITH 4" WIDE BOUNDARY LINE CONTINUOUS AROUND PERIMETER.

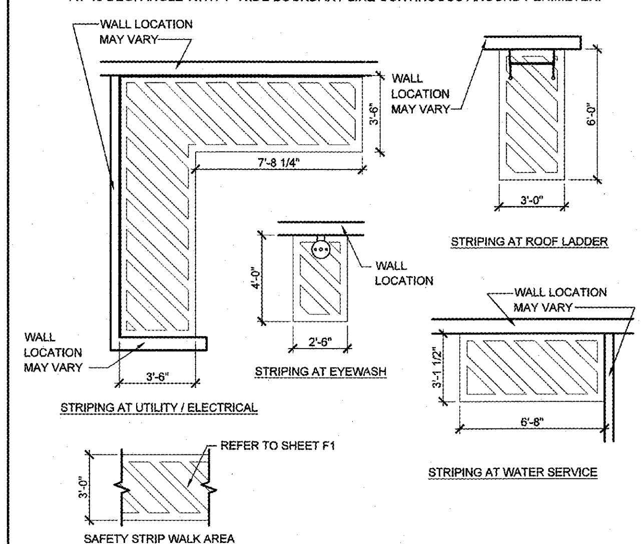

SIGNAGE LEGEND

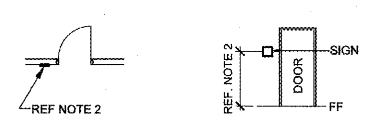

1. REQUIRED ACCESSIBLE ELEMENTS SHALL BE IDENTIFIED BY THE INTERNATIONAL SYMBOL OF ACCESSIBILITY AT THE FOLLOWING LOCATIONS

   -ACCESSIBLE ENTRANCES WHERE NOT ALL ENTRANCES ARE ACCESSIBLE

   -ACCESSIBLE CHECK-OUT AISLES WHERE NOT ALL AISLES ARE ACCESSIBLE. THE SIGN, WHERE PROVIDED, SHALL BE ABOVE THE CHECK-OUT AISLE IN THE SAME LOCATION AS THE CHECK-OUT AISLE NUMBER OR TYPE OF CHECK-OUT IDENTIFICATION

   -UNISEX TOILET

   -ACCESSIBLE DRESSING, FITTING AND LOCKER ROOMS WHERE NOT ALL SUCH ROOMS ARE ACCESSIBLE
2. TACTILE SIGNAGE SHALL BE LOCATED 48 INCHES (1220 MM) MINIMUM ABOVE THE FINISH FLOOR OR GROUND SURFACE, MEASURED FROM THE BASE OF THE LOWEST TACTILE CHARACTER AND 60 INCHES (1525 MM) MAXIMUM ABOVE THE FINISH FLOOR OR GROUND SURFACE, MEASURED FROM THE BASELINE OF THE HIGHEST TACTILE CHARACTER. WHERE A TACTILE SIGN IS PROVIDED AT A DOOR, THE SIGN SHALL BE LOCATED ALONGSIDE THE DOOR AT THE LATCH SIDE. WHERE A TACTILE SIGN IS PROVIDED AT DOUBLE DOORS WITH ONE ACTIVE LEAF, THE SIGN SHALL BE LOCATED ON THE INACTIVE LEAF. WHERE A TACTILE SIGN IS PROVIDED AT DOUBLE DOORS WITH TWO ACTIVE LEAFS, THE SIGN SHALL BE LOCATED TO THE RIGHT OF THE RIGHT HAND DOOR. WHERE THERE IS NO WALL SPACE AT THE LATCH SIDE OF A SINGLE DOOR OR AT THE RIGHT SIDE OF DOUBLE DOORS, SIGNS SHALL BE LOCATED ON THE NEAREST ADJACENT WALL. SIGNS CONTAINING TACTILE CHARACTERS SHALL BE LOCATED SO THAT A CLEAR FLOOR SPACE OF 18 INCHES (455 MM) MINIMUM BY 18 INCHES (455 MM) MINIMUM, CENTERED ON THE TACTILE CHARACTERS, IS PROVIDED BEYOND THE ARC OF ANY DOOR SWING BETWEEN THE CLOSED POSITION AND 45 DEGREE OPEN POSITION. EXCEPTION: SIGNS WITH TACTILE CHARACTERS SHALL BE PERMITTED ON THE PUSH SIDE OF DOORS WITH CLOSERS AND WITHOUT HOLD-OPEN DEVICES.
3. CHARACTER AND SYMBOLS OF SIGNS SHALL BE IN CONTRAST WITH THEIR BACKGROUND AND SHALL BE EGGSHELL, MATTE, OR OTHER NON-GLARE MATERIALS OR FINISHES
4. ACCESSIBLE SIGNAGE SHALL USE GRADE 2 BRAILLE AND MUST COMPLY WITH ICC A117.1 SECTION 703.4

FIXTURE HEIGHTS AND CLEARANCES

COMPLY WITH THIS CHART, ICC A117.1, AND ADA STANDARDS FOR ACCESSIBLE DESIGN - ICC REFERENCE IN PARENTHESIS

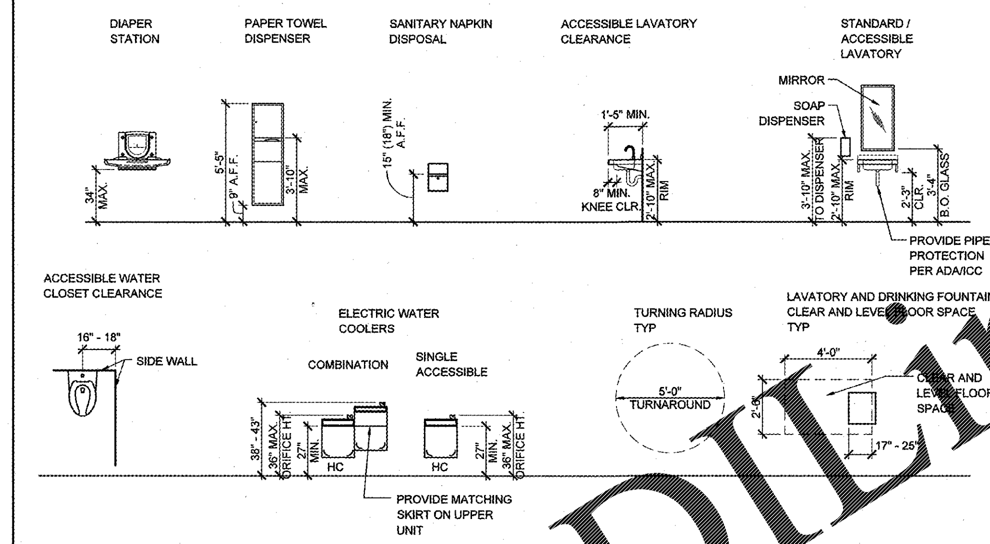

MOLD AND MILDEW NOTES

1. THE FOLLOWING REQUIREMENTS SHALL APPLY TO ALL NEW AND REMODEL CONSTRUCTION PROJECTS THE CONTRACTOR SHALL COMPLY WITH FEDERAL ENVIRONMENTAL AND OCCUPATIONAL HEALTH AND SAFETY ADMINISTRATION REGULATIONS AND ALL LOCAL AND STATE HEALTH DEPARTMENT REQUIREMENTS AND RECOMMENDATIONS REGARDING MOLD AND MILDEW.
2. IN THE EVENT THE CONTRACTOR DISCOVERS, AT ANY TIME THE PRESENCE OF MOLD AND / OR MILDEW, THE CONTRACTOR SHALL IMMEDIATELY NOTIFY THE OWNER'S REPRESENTATIVE AND THE ARCHITECT / ENGINEER OF RECORD, IN WRITING, OF THE CONCERNS AND/OR SUSPICIONS.
3. CONCURRENTLY, THE CONTRACTOR SHALL BE RESPONSIBLE TO RETAIN A MOLD AND MILDEW CERTIFIED TESTING AGENCY TO PERFORM AN INVESTIGATION AND TESTING AS REQUIRED TO EVALUATE THE NATURE AND EXTENT OF THE PROBLEM. IF THE TESTING AGENCY CONFIRMS HAZARDS, THE CONTRACTOR SHALL BE RESPONSIBLE TO OBTAIN A MINIMUM OF THREE (3) BIDS FROM COMPANIES QUALIFIED AND LICENSED TO PERFORM ALL NECESSARY REMEDIATION WORK, COMPLYING WITH ALL LOCAL, STATE AND FEDERAL ENVIRONMENTAL REGULATIONS, CODES, AND STATUTES.
4. ONCE SUSPICION OF MOLD AND / OR MILDEW IS MADE, THE CONTRACTOR SHALL TAKE ALL REASONABLE AND PRACTICAL PRECAUTIONS TO PROTECT ALL CONSTRUCTION PERSONNEL AND THE PUBLIC FROM THE EXPOSURE TO MOLD AND / OR MILDEW, AND SUCH PRECAUTIONS SHALL REMAIN IN PLACE UNTIL SUCH TIME AS THE OWNER OR HEALTH AUTHORITY DIRECTS OTHERWISE. CONSTRUCTION OPERATIONS SHALL NOT BE STOPPED OR CURTAILED, EXCEPT IN THE AREA OF MOLD / MILDEW CONCERN, DUE TO THESE REQUIRED PRECAUTIONS.
5. THE CONTRACTOR SHALL MAKE ALL REASONABLE EFFORTS TO AVOID CONDITIONS FAVORABLE TO THE DEVELOPMENT OF MOLD AND MILDEW, ESPECIALLY IN VOIDS WHICH WILL BE CONCEALED AND NOT VENTILATED. IN ALL CASES, INTERIOR SPACES AND INTERIOR FINISHED CONSTRUCTION SHALL BE MAINTAINED IN DRY AND WELL-VENTILATED CONDITIONS.
   a. PENETRATIONS SHALL BE SEALED WATER-TIGHT TO PREVENT MOISTURE MIGRATION FROM ENTERING THE BUILDING OR WALL CAVITIES.
   b. ALL CONDENSATE DRAIN PANS SHALL BE CLEANED AND KEPT FREE FROM DEBRIS UNTIL AND WHEN THE FACILITY IS TURNED OVER TO THE OWNER. INSURE POSITIVE DRAINAGE AT ALL DRAIN PANS. INSURE THAT ALL "COLD" SURFACES ARE INSULATED AND COVERED WITH A FULLY SEALED AND CONTINUOUS VAPOR BARRIER. ("COLD" SURFACES INCLUDE, BUT ARE NOT LIMITED TO, DOMESTIC COLD WATER PIPING, INTERIOR RAIN LEADERS, OUTDOOR AIR INTAKES, AND DUCTWORK CARRYING AIR CONDITIONED SUPPLY AIR.)
   c. ALL EXISTING SUPPLY AIR PATHS AND ALL EXISTING DUCTWORK TO BE RE-USED SHALL BE CLEANED AND TREATED AS REQUIRED TO REMOVE THE POTENTIAL FOR MOLD AND MILDEW. ALL DAMP AREAS SHALL BE DRIED THOROUGHLY PRIOR TO ENCLOSURE.

SYMBOLS

Symbol	Description
XX / XX TITLE SCALE: FULL	TITLE BUBBLE DETAIL NUMBER SHEET NUMBER
$ / AX.X	SECTION CUT SECTION DETAIL SHEET NUMBER
# / # # #	ELEVATION REFERENCE ELEVATION VIEW (OUTSIDE) DETAIL NUMBER SHEET NUMBER
# R	REVISION CLOUD
X / AX.X / XXX	DETAIL CLOUD DETAIL NUMBER SHEET NUMBER
TOP OF STEEL 1xx'-xx"	DATUM MARKS LOCATION ELEVATION REFERENCE
00	DOOR INDICATOR
X	WINDOW INDICATOR
OFFICE 102	ROOM NAME AND NUMBER INDICATOR
00	EQUIPMENT INDICATOR
A	COLUMN LINE INDICATOR
MS1	WALL TYPE INDICATOR
A	TOILET ACCESSORIES INDICATOR
VCT	FLOOR FINISH INDICATOR

ABBREVIATIONS

@	AT	L.F.	LINEAR FEET
℄ - ¢	CENTERLINE	MAS	MASONRY
⌀ - Ø	DIAMETER OR ROUND	MAX.	MAXIMUM
&	AND	MECH.	MECHANICAL
A, AMP.	AMPERE	MTL.	METAL
ABV.	ABOVE	MFR.	MANUFACTURER
A/C	AIR CONDITIONING	M.H.	MANHOLE
ACT	ACOUSTICAL TILE	MIN.	MINIMUM
ADA	AMERICANS W/ DISABILITIES ACT	MISC.	MISCELLANEOUS
		M.O.	MASONRY OPENING
A.F.F.	ABOVE FINISH FLOOR	MOD	MOTOR OPERATED DAMPER
AL.	ALUMINUM		
ALT.	ALTERNATIVE	MR.	MOISTURE RESISTANT
APPROX.	APPROXIMATE	MSB	MOP SINK BASIN
ARCH.	ARCHITECT	MTD.	MOUNTED
AHJ	AUTHORITY HAVING JURISDICTION	MATL.	MATERIAL(S)
		N.I.C.	NOT IN CONTRACT
BD.	BOARD	NO. OR #	NUMBER
BLDG.	BUILDING	NOM.	NOMINAL
BLK.	BLOCK	N.T.S.	NOT TO SCALE
BM.	BEAM		ON LINE
B.O.	BOTTOM OF	O.C.	ON CENTER (S)
B.O.C.	BASE OF CURB	O.D.	OUTSIDE DIAMETER
BOT.	BOTTOM	O/H	OVERHEAD
BRG.	BEARING	OPG	OPENING
B.U.	BUILT-UP	O.H.	OPPOSITE HAND
C.	CONDUIT OR CELSIUS	OPP.	OPPOSITE
C.A.	COMPRESSED AIR LINE		OUTSIDE AIR
C.B.	CATCH BASIN		ORIENTED STRAND BOARD
C.C.	CENTER TO CENTER		
CEM.	CEMENT	O.T.S.	OPEN TO STRUCTURE
CFM	CUBIC FEET PER MINUTE	PE.	POLYETHYLENE
C.J.	CONTROL JOINT	P/L.	PROPERTY LINE
CLG.	CEILING	PL.	PLATE
CLR.	CLEAR	P.LAM.	PLASTIC LAMINATE
CMU.	CONCRETE MASONRY UNIT	PLUMB.	PLUMBING
C.O.	CLEAN OUT	PLYWD.	PLYWOOD
COL.	COLUMN	PNL.	PANEL
CONC.	CONCRETE	PR	PAIR
CONT.	CONTINUOUS	PRE-FIN.	PRE-FINISHED
CONTR.	CONTRACTOR	P.S.F.	POUNDS PER SQUARE FOOT
CU	CONDENSING UNIT		
CW	COLD WATER	P.S.I.	POUNDS PER SQUARE INCH
C.T.	CERAMIC TILE		
DBL.	DOUBLE	PVC.	POLYVINYL CHLORIDE
DTL.	DETAIL	R.	RADIUS
DIA.	DIAMETER	RA.	RETURN AIR
DIM.	DIMENSION	RAD.	RADIANT HEATER
DN.	DOWN	RD.	ROUND/ ROOF DRAIN
DWG.	DRAWING	REINF.	REINFORCEMENT
EA.	EACH	REQ'D.	REQUIRED
EF	EXHAUST FAN	RM.	ROOM
E.I.F.S.	EXTERIOR INSULATION FINISH SYSTEM	R.O.	ROUGH OPENING
		RESLT.	RESILIENT
E.J.	EXPANSION JOINT	S.A.	SUPPLY AIR
EL.	ELEVATION	S.C.	SOLID CORE
ELECT.	ELECTRIC	SCHED.	SCHEDULE
EQ.	EQUAL	S.D.	SMOKE DETECTOR
EQP.	EQUIPMENT	SEAL.	SEALANT
E.W.C.	ELECTRIC WATER COOLER	SECT.	SECTION
		S.F.	SQUARE FOOT/FEET
EXP.	EXPANSION	SHT.	SHEET
EXT.	EXTERIOR	SHTG.	SHEETING
F.A.	FIRE ALARM	SIM.	SIMILAR
FAI	FRESH AIR INTAKE	S.J.	SAW CUT JOINT
FCO	FLOOR CLEAN OUT	SPECS.	SPECIFICATIONS
FD.	FIRE DAMPER	SQ.	SQUARE
F.D.	FLOOR DRAIN	S.S.	STAINLESS STEEL
FDC	FIRE DEPARTMENT CONNECTION	SAN.	SANITARY
		STD.	STANDARD
FDN.	FOUNDATION	STL.	STEEL
F.E.	FIRE EXTINGUISHER	STRUCT.	STRUCTURAL
F.F.	FINISH FLOOR	SUSP.	SUSPENDED
FIN.	FINISH (ED)	T.	TREAD AND TRANSFORMER
FLR.	FLOOR (ING)		
F.O.	FACE OF	TBL.	TABLE
FRP.	FIBER REINFORCED PANEL	T&G	TONGUE & GROOVE
		THK.	THICKNESS
FT.	FOOT OR FEET	T.O.	TOP OF
FTG.	FOOTING	T.O.C.	TOP OF CURB/CONCRETE
FURR.	FURRING		
GA.	GAUGE	T.O.P.	TOP OF PAVEMENT/PARAPET
GAL.	GALLON		
GALV.	GALVANIZED	T.S.	TUBE STEEL
G.C.	GENERAL CONTRACTOR	TYP.	TYPICAL
G.F.I.	GROUND FAULT INTERRUPTER	U.D.L.	UNIFORM DISTRIBUTED LOAD
GND.	GROUND	U.N.O.	UNLESS NOTED OTHERWISE
GYP. BD.	GYPSUM BOARD		
H.B.	HOSE BIB	UR	URINAL
H.C.	HANDICAPPED	V.	VOLTS AND VENT
H.M.	HOLLOW METAL	VENT.	VENTILATION
H.P.	HIGH POINT AND HORSE-POWER	VERT.	VERTICAL
		V.I.F.	VERIFY IN FIELD
HVAC	HEATING VENTILATING AND AIR CONDITIONING	V.C.T.	VINYL COMPOSITION TILE
HW	HOT WATER	VTR.	VENT THRU ROOF
I.D.	INSIDE DIAMETER	VTW.	VENT THRU WALL
IE.	INVERT ELEVATION	V.W.C.	VINYL WALL COVERING
I.G.	ISOLATED GROUND	W.	WATTS AND WATER
IN.	INCH	W/	WITH
INSUL.	INSULATION	WC	WATER CLOSET
INT.	INTERIOR	W/O	WITHOUT
INV.	INVERT	WCO	WALL CLEAN OUT
JT.	JOINT	WD.	WOOD
LAM.	LAMINATE	WH.	WATER HEATER
LAV.	LAVATORY	WP.	WATERPROOF
LBS.	POUNDS	W.W.F.	WELDED WIRE FABRIC

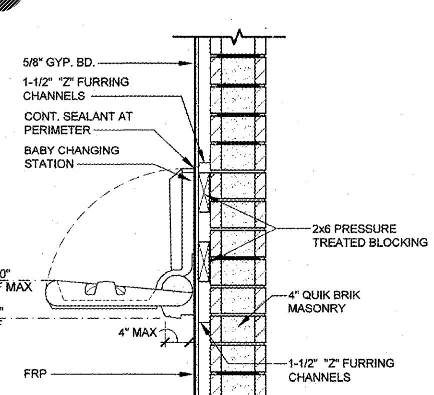

1/N1 BABY CHANGING STATION DETAIL
SCALE: 1"=1'-0"

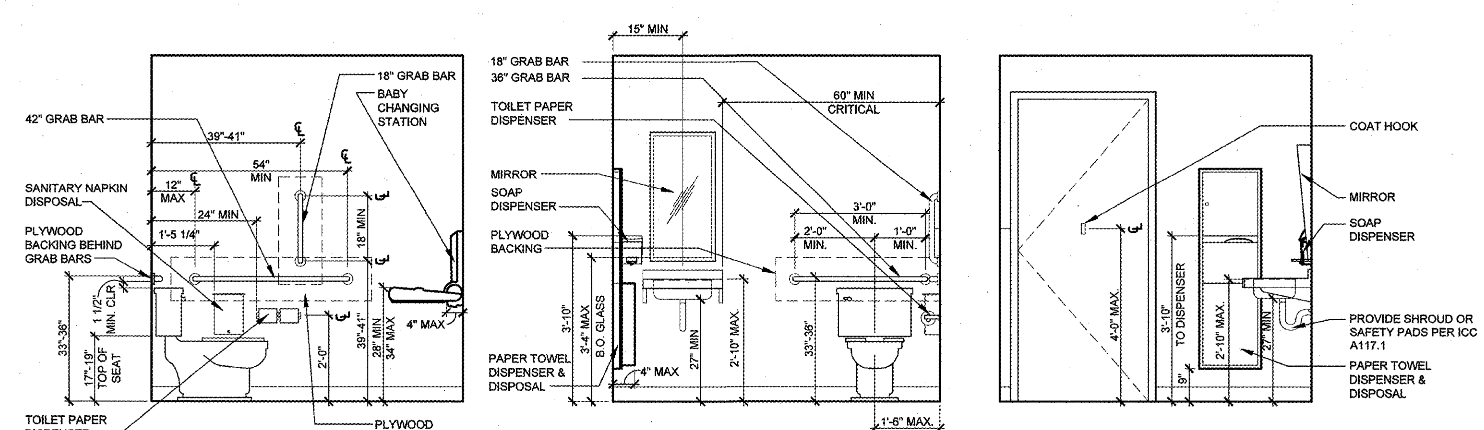

2/N1 FIXTURES AND GRAB BAR LOCATIONS
SCALE: 1/2"=1'-0"

SGA Design Group, P.C.
1437 South Boulder, Suite 550
Tulsa, Oklahoma 74119.3609
p: 918.587.8600
f: 918.587.8601
www.sgadesigngroup.com

Firestone COMPLETE AUTO CARE since 1926

THIS DRAWING IS THE PROPERTY OF BRIDGESTONE RETAIL OPERATIONS, LLC AND IS LOANED ON THE EXPRESS CONDITION THAT IT IS NOT TO BE USED IN ANY WAY DELETERIOUS TO THE INTERESTS OF BRIDGESTONE RETAIL OPERATIONS, LLC. THE ACCEPTANCE OF THIS DRAWING WILL BE CONSTRUED AS AN ACCEPTANCE OF THE FOREGOING CONDITION AND AS ADMISSION TO THE EXCLUSIVE OWNERSHIP IN AND TO THE DRAWING BY BRIDGESTONE RETAIL OPERATIONS, LLC.

STIPULATION OF REUSE
THIS DRAWING WAS PREPARED FOR USE ON A SPECIFIC SITE AT WILLIAMSBURG, VA CONTEMPORANEOUSLY WITH ITS ISSUE DATE ON 08/10/2017 AND IT IS NOT SUITABLE FOR USE ON A DIFFERENT PROJECT SITE OR AT A LATER TIME. USE OF THIS DRAWING FOR REFERENCE OR EXAMPLE ON ANOTHER PROJECT REQUIRES THE SERVICES OF PROPERLY LICENSED ARCHITECTS AND ENGINEERS. REPRODUCTION OF THIS DRAWING FOR REUSE ON ANOTHER PROJECT IS NOT AUTHORIZED AND MAY BE CONTRARY TO THE LAW.

NEW FCAC STORE
2015 - JUNE- ER - RIGHT
1900 RICHMOND ROAD
WILLIAMSBURG, VA

COMMONWEALTH OF VIRGINIA
DOUG TAYRIEN
Lic. No. 0401014956
ARCHITECT
08/10/17

ISSUE BLOCK

PROPERTY NO.:	167739
6 DIGIT NO.:	785533
4 DIGIT NO.:	6868

AOR PROJECT NUMBER: 1655B14
TO PERMIT: DATE: 08/10/17
TO BID: DATE: TBD
DRAWN BY: JD
CHECKED BY: MGC

SHEET TITLE: GENERAL INFORMATION

SHEET NUMBER: N1

Aug 09, 2017 - 5:38pm - USER: jeff3
P:\BSRO\Projects\Williamsburg VA -- 785533\C - Drawings & Design\Building Drawings\01_FCAC_ER-N01.dwg
Order Plans @ www.LDILine.com