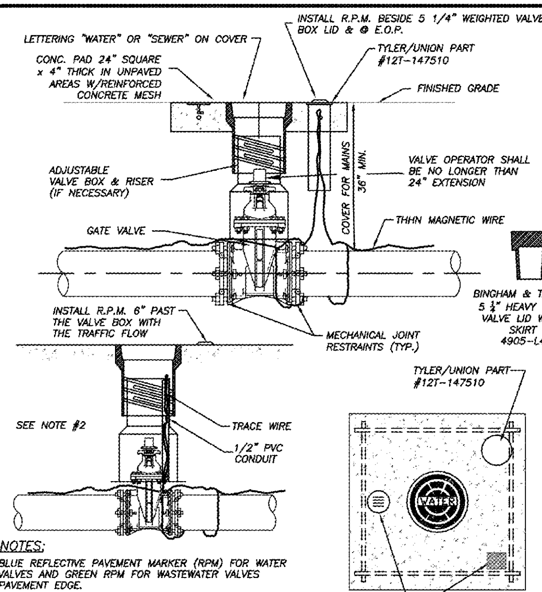

NOTES:

1. BLUE REFLECTIVE PAVEMENT MARKER (RPM) FOR WATER VALVES AND GREEN RPM FOR WASTEWATER VALVES PAVEMENT EDGE.
2. FOR WATER AND WASTEWATER VALVES INSTALLED IN PAVED AREAS, ELIMINATE CONCRETE PAD AND ENCASE THE MAGNETIC WIRE IN 1/2" PVC INSIDE THE VALVE BOX SEVEN INCHES BELOW GRADE.
3. DIP MAY BE USED AS RISERS ONLY IF A VALVE BOX IS NOT MANUFACTURED FOR THAT DEPTH. NO PVC RISERS SHALL BE USED IN ANY CIRCUMSTANCES.

TYPICAL GATE VALVE & VALVE BOX DETAIL
N.T.S.

FORT PIERCE UTILITIES AUTHORITY	TYPICAL GATE VALVE & VALVE BOX DETAIL				M-6
	2015	RPM PLACEMENT	SLL	JLC	
	DATE:	REVISION:	BY:	APPD:	WATER/WASTEWATER ENGINEERING
	DESIGNED: JLC	COMPUTER FILE #: MISC DETAILS 200602.DWG			FT. PIERCE UTILITIES AUTHORITY
	DRAWN BY: SLL	SCALE: N.T.S.			
	APPROVED: JLC	DATE: 2010			SHEET 1 OF 1

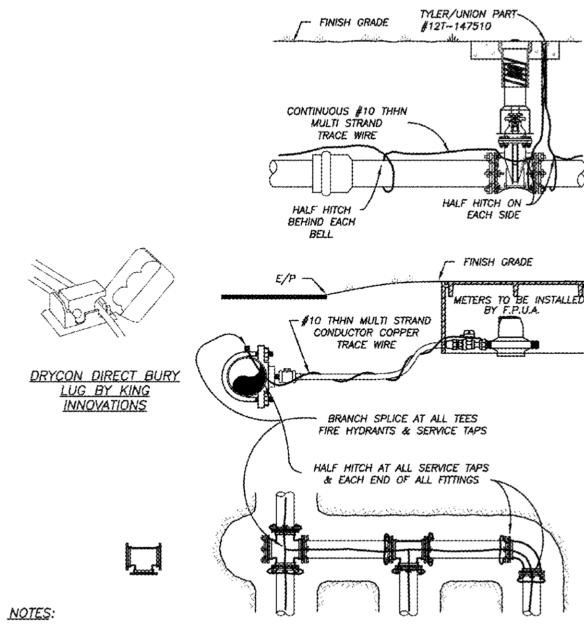

NOTES:

1) TRACE WIRE IS REQUIRED ON ALL PIPE AS NOTED BY UTILITIES ENGINEER AND SHOWN IN STANDARD DETAILS.
2) INCLUDE ALL COST OF MATERIAL & LABOR IN PRICE OF PIPE.
3) CONTRACTOR IS RESPONSIBLE FOR CONTINUITY OF ALL TRACE WIRE.

TRACE WIRE
(N.T.S.)

FORT PIERCE UTILITIES AUTHORITY	TRACE WIRE DETAIL				M-11
	DATE:	REVISION:	BY:	APPD:	WATER/WASTEWATER ENGINEERING
	DESIGNED: JJM	COMPUTER FILE #: MISC DETAILS 200602.DWG			FT. PIERCE UTILITIES AUTHORITY
	DRAWN BY: JJM	SCALE: N.T.S.			
	APPROVED: JLC	DATE: 2010			SHEET 1 OF 1

GENERAL POLICY

WHERE COST JUSTIFIED AND OPERATIONALLY FEASIBLE, IT IS THE GENERAL POLICY OF THE F.P.U.A. TO PROVIDE WATER, ELECTRIC, SEWER AND GAS SERVICE FROM THE STREET SIDE OF A PIECE OF PROPERTY. DEPENDING ON FACTORS SUCH AS LOCATION OF EXISTING SUPPLY SOURCE FACILITIES, REAR OR SIDE LOT LINE SUPPLY MAY BE AUTHORIZED, BUT ONLY WITH PRIOR APPROVAL FROM THE F.P.U.A.

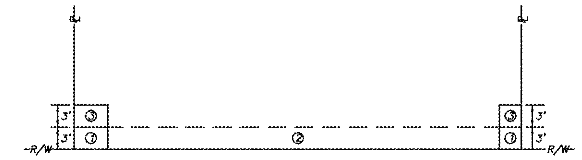

NOTES:

1. THE PREFERRED POINT OF CONNECTION TO THE F.P.U.A. WATER METER, AREA ① SHALL BE LOCATED IN THE CORNER OF THE PROPERTY SELECTED BY THE F.P.U.A. AS THE BEST LOCATION FOR THE WATER METER. EVERY EFFORT WILL BE MADE TO SELECT THE CORNER WHERE TWO WATER SERVICES AND METERS CAN BE CONNECTED.
2. IF PHYSICAL BARRIERS OR OTHER OBSTACLES PREVENT THE CONNECTION OF THE BUILDING SERVICE LINE TO THE F.P.U.A. WATER SERVICE, WITHIN AREA ①, THE F.P.U.A. ENGINEERING DEPARTMENT MAY AUTHORIZE THE CONNECTION ALONG THE PORTION OF THE R/W LINE MARKED AREA ②, OR ALONG THE PROPERTY LINES MARKED AREA ③.
3. HORIZONTAL SEPARATION OF WATER AND WASTEWATER SERVICES SHOULD BE A MINIMUM OF 6 FEET AND PREFERABLY 10 FEET.
4. ALL METERS SHALL BE INSTALLED IN AN UNRESTRICTED AREA FOLLOWING EASE OF ACCESS AND PROVIDING ADEQUATE PROTECTION.
5. THE F.P.U.A. SHALL BE RESPONSIBLE FOR THE MAINTENANCE AND REPAIR OF THE WATER LATERAL WITHIN THE EASEMENT OR RIGHT-OF-WAY, UP TO THE POINT OF CONNECTION.

WATER METER PLACEMENT
(N.T.S.)

FORT PIERCE UTILITIES AUTHORITY	WATER METER PLACEMENT POLICY				W-1
	03-09	02-15	SLL		
	DATE:	REVISION:	BY:	APPD:	WATER/WASTEWATER ENGINEERING
	DESIGNED: JLC	COMPUTER FILE #: WATER DETAILS 200602.DWG			FT. PIERCE UTILITIES AUTHORITY
	DRAWN BY: SLL	SCALE: N.T.S.			
	APPROVED: JLC	DATE: 2010			SHEET 1 OF 1

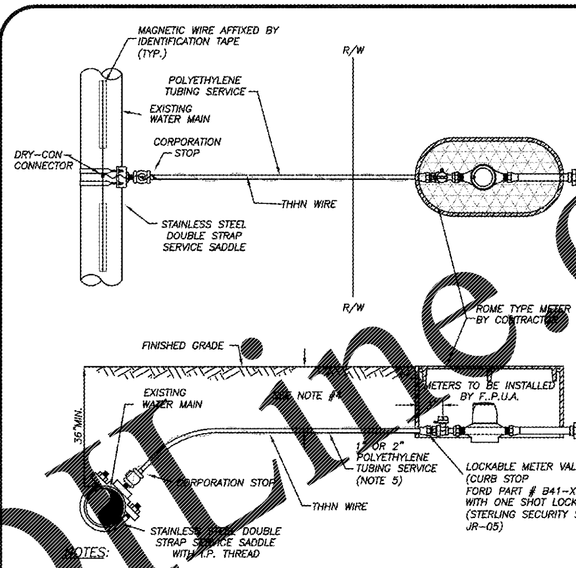

NOTES:

1. BLUE 10 GAUGE THHN WIRE SHALL BE ATTACHED TO THE SERVICE LINE.
2. WHERE SERVICES UNDER PAVEMENT ARE REQUIRED, THE POLYETHYLENE TUBING SHALL BE INSTALLED WITHIN SCHEDULE 40 PVC CASING PIPE.
3. 1" & 3/4" METER SIZES SHALL REQUIRE A LOCKABLE METER VALVE. (CURB STOP)
4. MINIMUM COVER IN UNPAVED AREAS SHALL BE 30", IN PAVED AREAS OR PLANNED ROADWAYS OR SWALES MIN. COVER SHALL BE 36".
5. FOR 2" COMMERCIAL SERVICE INSTALLATIONS, FPUA WILL INSTALL ABOVE GROUND METER PER DETAIL W-8.

TYPICAL SINGLE WATER SERVICE CONNECTION
(N.T.S.)

FORT PIERCE UTILITIES AUTHORITY	TYPICAL SINGLE WATER SERVICE CONNECTION				W-2
	03-09	DESIGN	SLL	JLC	
	DATE:	REVISION:	BY:	APPD:	WATER/WASTEWATER ENGINEERING
	DESIGNED: JLC	COMPUTER FILE #: WATER DETAILS 200602.DWG			FT. PIERCE UTILITIES AUTHORITY
	DRAWN BY: SLL	SCALE: N.T.S.			
	APPROVED: JLC	DATE: 2010			SHEET 1 OF 1

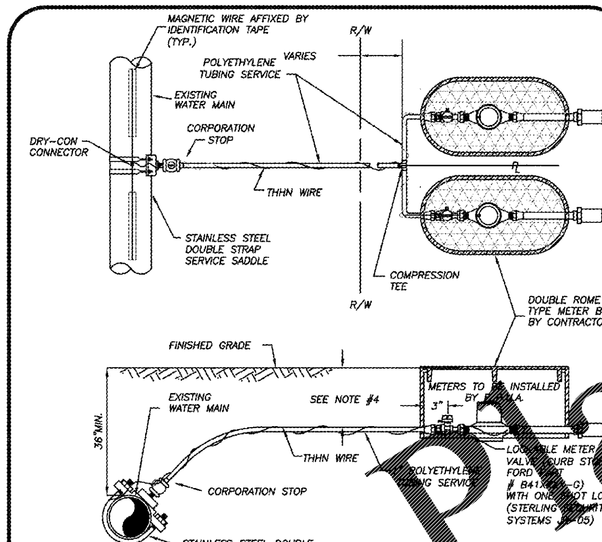

NOTES:

1. BLUE 10 GAUGE THHN WIRE SHALL BE ATTACHED TO THE SERVICE LINE.
2. WHERE SERVICES UNDER PAVEMENT ARE REQUIRED, THE POLYETHYLENE TUBING SHALL BE INSTALLED WITHIN SCHEDULE 40 PVC CASING PIPE.
3. 1" & 3/4" METER SIZES SHALL REQUIRE A LOCKABLE METER VALVE. (CURB STOP)
4. MINIMUM COVER IN UNPAVED AREAS SHALL BE 30", IN PAVED AREAS OR PLANNED ROADWAYS OR SWALES MIN. COVER SHALL BE 36".

TYPICAL DOUBLE WATER SERVICE CONNECTION
(N.T.S.)

FORT PIERCE UTILITIES AUTHORITY	TYPICAL DOUBLE WATER SERVICE CONNECTION				W-3
	03-09	DESIGN	SLL	JLC	
	DATE:	REVISION:	BY:	APPD:	WATER/WASTEWATER ENGINEERING
	DESIGNED: JLC	COMPUTER FILE #: WATER DETAILS 200602.DWG			FT. PIERCE UTILITIES AUTHORITY
	DRAWN BY: SLL	SCALE: N.T.S.			
	APPROVED: JLC	DATE: 2010			SHEET 1 OF 1

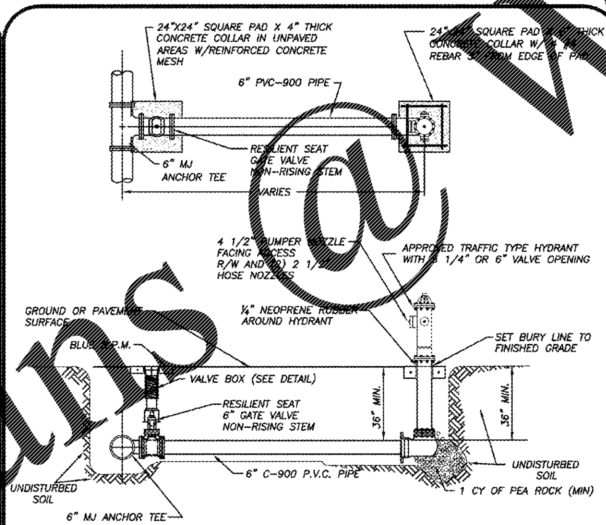

NOTES:

1. HYDRANT SHALL BE INSTALLED PLUMB & TRUE.
2. HYDRANT SHALL BE PAINTED CARNIVAL RED FROM FACTORY.
3. HEEL TO REST IN UNDISTURBED SOIL.
4. THE ONLY HYDRANTS ACCEPTABLE ARE: KENNEDY GUARDIAN, MUELLER CENTURION, & AMERICAN AVK, CLOW OR APPROVED EQUAL.
5. HYDRANT ASSEMBLY MUST BE RESTRAINED TO TEE.
6. ALL FITTINGS SHALL BE MECHANICAL JOINT.
7. ENTIRE ASSEMBLY TO BE MECHANICALLY RESTRAINED.
8. BLUE LOCATOR SHALL BE PLACED IN CENTER OF TRAVEL LANE CLOSEST TO HYDRANT.
9. ALL HYDRANT VALVE BOX COVERS SHALL BE PAINTED CARNIVAL RED.
10. LOCATE WIRE SHALL TERMINATE AT HYDRANT ISOLATION VALVE
11. HYDRANTS SHALL BE NO MORE THAN FIFTEEN FEET (15 FT.) FROM THE CURB OF ROADWAYS OR FROM THE EDGE OF PAVEMENT. CLEARANCES OF SEVEN AND ONE HALF FEET (7FT-6IN.) IN FRONT OF AND TO THE SIDES OF THE FIRE HYDRANTS, WITH FOUR FOOT (4 FT.) CLEARANCE TO THE REAR OF HYDRANTS SHALL BE MAINTAINED.

TYPICAL FIRE HYDRANT ASSEMBLY
(N.T.S.)

FORT PIERCE UTILITIES AUTHORITY	TYPICAL FIRE HYDRANT ASSEMBLY				W-5
	03-09	DESIGN	SLL	JLC	
	DATE:	REVISION:	BY:	APPD:	WATER/WASTEWATER ENGINEERING
	DESIGNED: JLC	COMPUTER FILE #: WATERDETAIL.DWG			FT. PIERCE UTILITIES AUTHORITY
	DRAWN BY: SLL	SCALE: N.T.S.			
	APPROVED: JLC	DATE: 2010			SHEET 1 OF 1

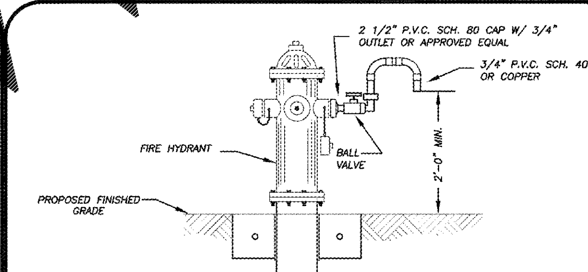

BACTERIOLOGICAL SAMPLING POINT @ FIRE HYDRANT
(N.T.S.)

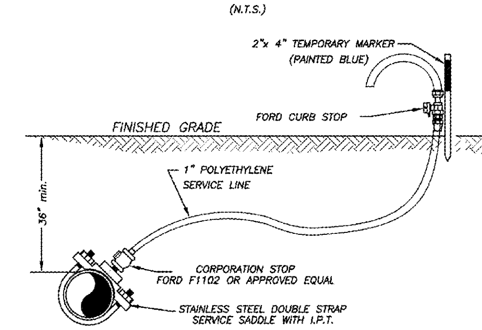

BACTERIOLOGICAL SAMPLING POINT @ WATER MAIN
(N.T.S.)

NOTE:

AFTER TESTING REMOVE 1" P.E. LINE AND CAP WITH BRASS PLUG AT CORPORATION STOP.

FORT PIERCE UTILITIES AUTHORITY	BACTERIOLOGICAL SAMPLING PONIT DETAIL				W-6
	03-09	02-15	SLL	JLC	
	DATE:	REVISION:	BY:	APPD:	WATER/WASTEWATER ENGINEERING
	DESIGNED: JLC	COMPUTER FILE #: WATERDETAIL.DWG			FT. PIERCE UTILITIES AUTHORITY
	DRAWN BY: SLL	SCALE: N.T.S.			
	APPROVED: JLC	DATE: 2010			SHEET 1 OF 1

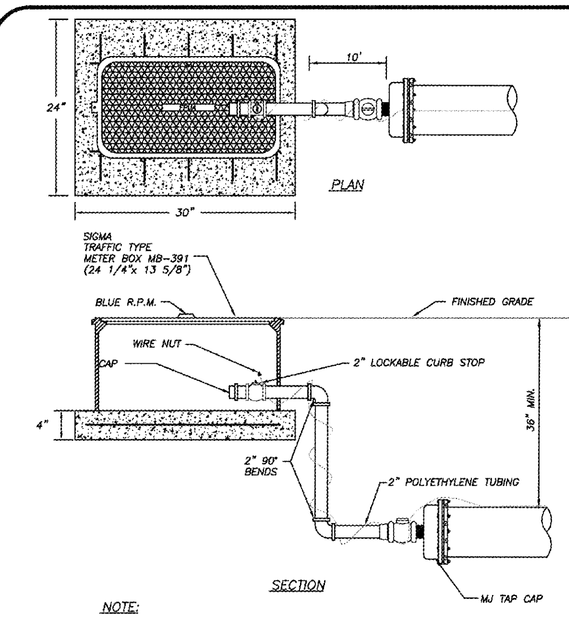

NOTE:

1. CAP SHALL BE RESTRAINED PER MANUFACTURER'S RECOMMENDATIONS AND F.P.U.A. REQUIREMENTS.
2. BLUE RPM FOR BLOWOFF ASSEMBLY
3. CONCRETE SLAB TO BE 3000 PSI WITH 6" X 6" WIRE MESH.

MANUAL BLOWOFF ASSEMBLY
(N.T.S.)

FORT PIERCE UTILITIES AUTHORITY	MANUAL BLOWOFF ASSEMBLY				W-7
	03-09	DESIGN	SLL	JLC	
	DATE:	REVISION:	BY:	APPD:	WATER/WASTEWATER ENGINEERING
	DESIGNED: JLC	COMPUTER FILE #: WATER DETAILS 200602.DWG			FT. PIERCE UTILITIES AUTHORITY
	DRAWN BY: SLL	SCALE: N.T.S.			
	APPROVED: JLC	DATE: 2010			SHEET 1 OF 1

BOHLER ENGINEERING™

SITE CIVIL AND CONSULTING ENGINEERING
LAND SURVEYING · PROGRAM MANAGEMENT · LANDSCAPE ARCHITECTURE
SUSTAINABLE DESIGN · PERMITTING SERVICES · TRANSPORTATION SERVICES

◆ UPSTATE NEW YORK ◆ NEW ENGLAND ◆ BOSTON, MA ◆ NEW YORK METRO ◆ NEW YORK, NY ◆ NEW JERSEY ◆ PHILADELPHIA, PA
◆ LEHIGH VALLEY, PA ◆ SOUTHEASTERN, PA ◆ REHOBOTH BEACH, DE ◆ BALTIMORE, MD ◆ SOUTHERN MARYLAND ◆ NORTHERN VIRGINIA ◆ CENTRAL VIRGINIA
◆ RALEIGH, NC ◆ CHARLOTTE, NC ◆ ATLANTA, GEORGIA ◆ TAMPA, FL ◆ SOUTH FLORIDA

THE INFORMATION AND CONTENT OF THIS PLAN ARE PROPRIETARY AND SHALL NOT BE COPIED OR USED FOR ANY PURPOSE WITHOUT PRIOR WRITTEN AUTHORIZATION FROM BOHLER ENGINEERING. ONLY APPROVED, SIGNED AND SEALED PLANS SHALL BE UTILIZED FOR CONSTRUCTION PURPOSES © 2016 BOHLER ENGINEERING

REVISIONS

REV	DATE	COMMENT	BY
1	8/9/2016	PER CITY COMMENTS	SMT
2	10/20/2016	REVISIONS PER SFWMD COMMENTS	SMT
3	4/10/2017	PER FDOT AND SFWMD COMMENTS	DJE
4	4/24/2017	PER CITY OF FORT PIERCE COMMENTS	SGM
5	5/12/2017	PER CITY OF FORT PIERCE COMMENTS	SGM
6	6/21/2017	PER FDOT COMMENTS	SGM
7	7/14/2017	PER FDOT COMMENTS	SGM

811 KNOW WHAT'S BELOW ALWAYS CALL 811 BEFORE YOU DIG
It's fast. It's free. It's the law.
www.callsunshine.com

APPROVED FOR CONSTRUCTION

PROJECT No.:	FLB15009
DRAWN BY:	DJE
CHECKED BY:	CR
DATE:	06/24/16
SCALE:	
CAD I.D.:	SD3

PROJECT: SR 70 AND JENKINS
FOR
WAWA
Wawa

LOCATION OF SITE
SEC SR 70 & S JENKINS RD
FORT PIERCE, FLORIDA

BOHLER ENGINEERING
2255 GLADES ROAD, SUITE 305E
BOCA RATON, FLORIDA 33431
Phone: (561) 571-0280
Fax: (561) 571-0281
FLORIDA BUSINESS CERT. OF AUTH. No. 30780
LANDSCAPE ARCHITECT BUSINESS LIC. No LC26000551

SHEET TITLE:
CONSTRUCTION DETAILS

SHEET NUMBER:
D-6

Order Plans @ WWW.LDDLine.com