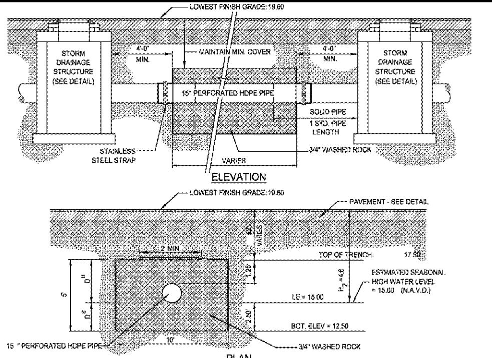

NOTES:

1. PIPES SHALL CONNECT TO ADDITIONAL CATCH BASINS AS REQUIRED.
2. BALLAST ROCK SHALL CONSIST OF 3/4" WASHED ROCK AND BE FROM FRESH WATER WASHED FREE OF DELETERIOUS MATTER.
3. TRENCH TO BE LINED WITH AMOCO PROPEX 4546 OR APPROVED EQUIVALENT TYPE FILTER FABRIC. OVERLAP TRENCH LINING MATERIAL A MINIMUM OF 2' AT TOP OF TRENCH. CLOSE ENDS AND STRAP AROUND PIPE.
4. IN AREAS OVER TRENCH WHERE THE FULL ROADWAY SECTION CANNOT BE CONSTRUCTED, THE AREA ABOVE THE TRENCH SHALL CONSIST ENTIRELY OF LIMEROCK BASE (LBR100).

EXFILTRATION TRENCH

SCALE: NONE

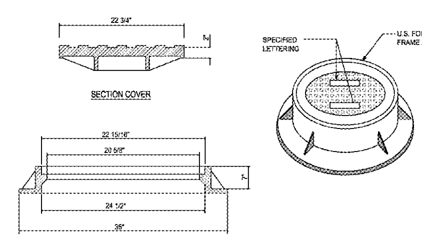

NOTE:

1. RING AND COVER TO BE TYPE U.S.F. No. 420-C

MANHOLE FRAME DETAIL

SCALE: NONE

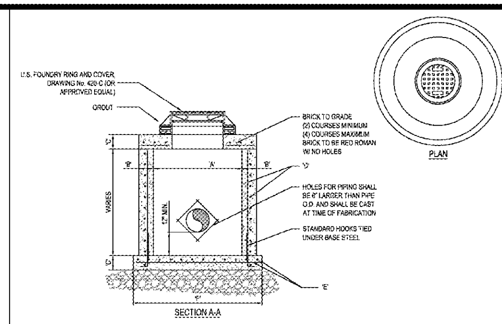

TYPE	"A"	"B"	"C"	"D"	"E"	"F"
M-4	4'-0" Ø	8"	8"	# 4 @ 12" C.C.E.W.	# 4 @ 12" C.C.E.W.	6'-4" Ø
M-5	5'-0" Ø	8"	8"	# 5 @ 12" C.C.E.W.	# 5 @ 12" C.C.E.W.	7'-4" Ø
M-6	6'-0" Ø	8"	8"	# 5 @ 12" C.C.E.W.	# 5 @ 6" C.C.E.W.	8'-4" Ø
M-7	7'-0" Ø	8"	8"	# 5 @ 12" C.C.E.W.	# 5 @ 6" C.C.E.W.	9'-4" Ø
M-8	8'-0" Ø	10"	10"	2- W.W.M. w/ # 4 @ 12" C.C. VERT	# 5 @ 6" C.C.E.W.	10'-8" Ø

PRECAST CIRCULAR DRAINAGE MANHOLE

SCALE: NONE

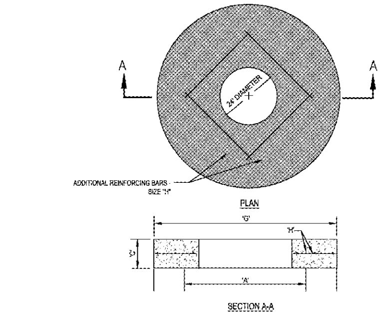

TYPE	"A"	"C"	"G"	"H"
M-4	4'-0" Ø	8"	5'-4" Ø	# 4 @ 8" C.C.E.W.
M-5	5'-0" Ø	8"	6'-4" Ø	# 5 @ 8" C.C.E.W.
M-6	6'-0" Ø	8"	7'-4" Ø	# 5 @ 8" C.C.E.W.
M-7	7'-0" Ø	8"	8'-4" Ø	# 5 @ 8" C.C.E.W.
M-8	8'-0" Ø	10"	9'-8" Ø	# 5 @ 8" C.C.E.W.

PRECAST CONCRETE-TOP SLAB FOR DRAINAGE MANHOLES

SCALE: NONE

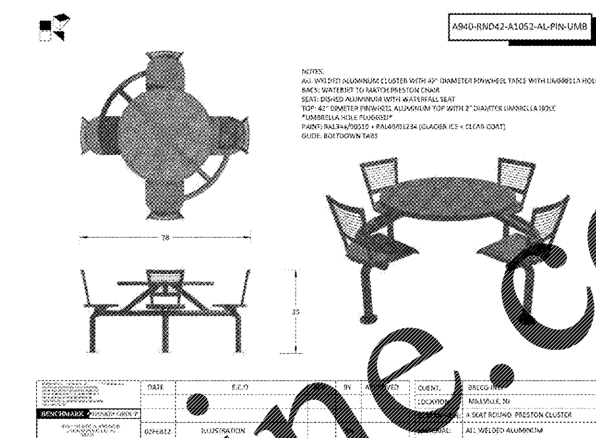

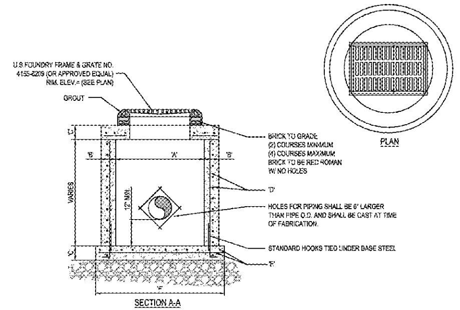

TYPE	"A"	"B"	"C"	"D"	"E"	"F"
C-4	4'-0" Ø	8"	8"	# 4 @ 12" C.C.E.W.	# 4 @ 12" C.C.E.W.	6'-4" Ø
C-5	5'-0" Ø	8"	8"	# 5 @ 12" C.C.E.W.	# 5 @ 12" C.C.E.W.	7'-4" Ø
C-6	6'-0" Ø	8"	8"	# 5 @ 12" C.C.E.W.	# 5 @ 6" C.C.E.W.	8'-4" Ø
C-7	7'-0" Ø	8"	8"	# 5 @ 12" C.C.E.W.	# 5 @ 6" C.C.E.W.	9'-4" Ø
C-8	8'-0" Ø	10"	10"	2- W.W.M. w/ # 4 @ 12" C.C. VERT	# 5 @ 6" C.C.E.W.	10'-8" Ø

PRECAST CIRCULAR CATCH BASIN

SCALE: NONE

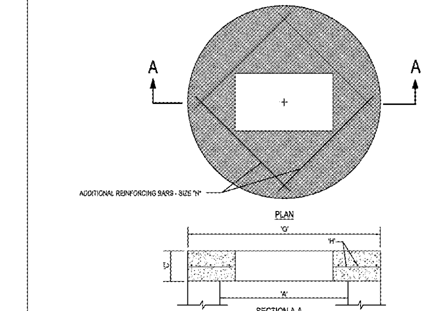

TYPE	"A"	"C"	"G"	"H"
C-4	4'-0" Ø	8"	5'-4" Ø	# 4 @ 6" C.C.E.W.
C-5	5'-0" Ø	8"	6'-4" Ø	# 5 @ 6" C.C.E.W.
C-6	6'-0" Ø	8"	7'-4" Ø	# 5 @ 6" C.C.E.W.
C-7	7'-0" Ø	8"	8'-4" Ø	# 5 @ 6" C.C.E.W.
C-8	8'-0" Ø	10"	9'-8" Ø	# 5 @ 6" C.C.E.W.

PRECAST CONCRETE-TOP SLAB

SCALE: NONE

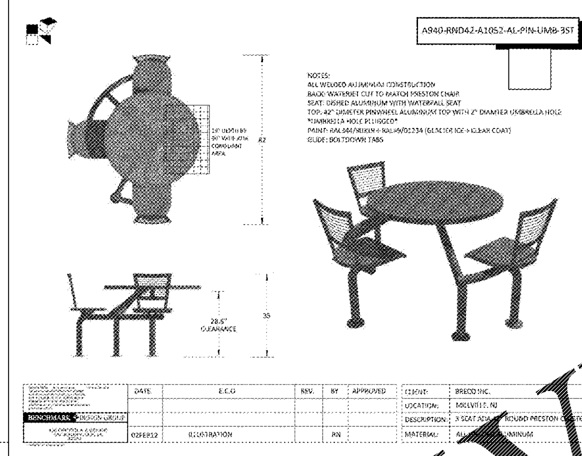

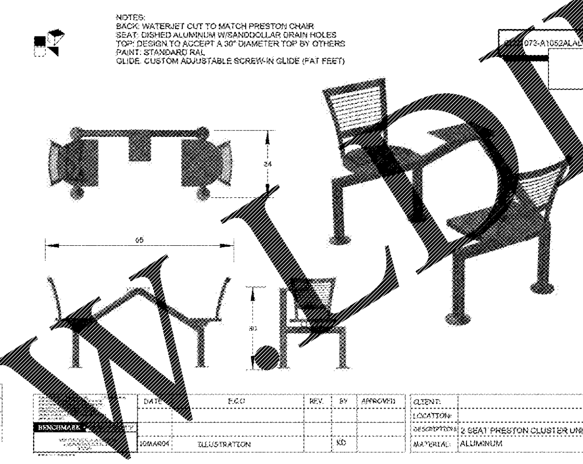

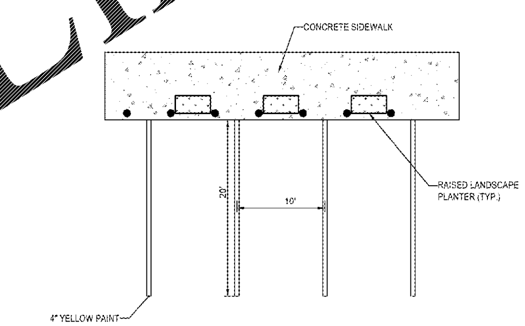

STANDARD PARKING SPACE DETAIL
(ADJACENT TO BUILDING)
NOT TO SCALE

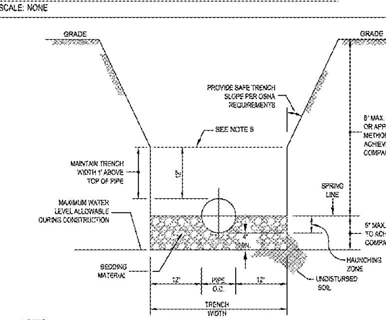

NOTES:

1. WHERE SOIL CONDITIONS CAN NOT BE MAINTAINED AS SHOWN ABOVE, PROVIDE APPROVED MEANS OF CONSTRUCTION.
2. BEDDING MATERIAL SHALL CONSIST OF WELL GRADED ASTM C33 #67 ROCK (3/4" TO No.4) AND BE PLACED TO SPRING LINE OF PIPE.
3. BACKFILL MATERIAL SHALL BE FREE OF MUCK, STUMPS, ROOTS, ROCKS OR OTHER MATERIAL UNACCEPTABLE TO ENGINEER.
4. SHEETING WILL BE REQUIRED AS DETERMINED IN THE FIELD.
5. REFER TO SPECIFICATIONS FOR EXCAVATION IN MUCK OR OTHER UNSUITABLE MATERIAL.
6. COMPACTION PERCENTAGES SHOWN REFER TO AASHTO T-180.
7. MECHANICAL COMPACTION NOT ALLOWED BELOW THIS LEVEL (WITHIN 12" OF TOP OF PIPE).
8. THOROUGHLY WORK IN AND TAMP THE BEDDING MATERIAL IN THE HAUNCHING ZONE BEFORE PLACING AND COMPACTING REMAINDER OF BACKFILL.

TRENCH DETAIL

SCALE:

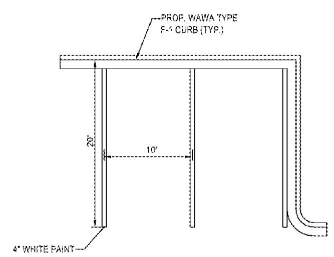

STANDARD PARKING SPACE DETAIL (SEE PLAN)
NOT TO SCALE

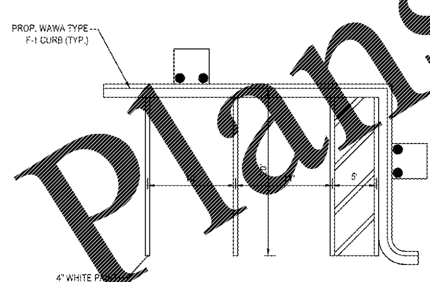

SPECIALTY PARKING SPACE DETAIL
NOT TO SCALE

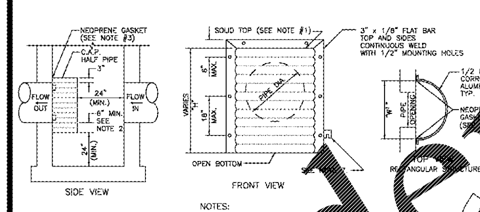

PIPE DIA.	W^1 (IN)	W^2 (IN)	T (GAUGE)	H (IN)
15"	21"	21"	16	VARIES
18"	24"	24"	16	VARIES
21"	30"	30"	[illegible]	VARIES
24"	30"	36"	16	VARIES
30"	36"	[illegible]	14	VARIES
36"	42"	[illegible]	14	VARIES
42"	48"	[illegible]	14	VARIES
48"	54"	[illegible]	14	VARIES
54"	60"	[illegible]	14	VARIES

1. RECTANGULAR STRUCTURE
2. ROUND STRUCTURE

NOTES:

1. ALUMINUM SHEET OF SAME THICKNESS (GAUGE) AS [illegible] SHALL BE WELDED TO CLOSE OPENING [illegible] THE TOP.
2. THE BOTTOM ELEVATION [illegible] THE POLLUTION RETARDANT BAFFLE MUST BE AT LEAST 2' BELOW CONTROL ELEVATION.
3. NEOPRENE [illegible] BACKED GASKET, OR APPROVED EQUAL (1" [illegible]) SHALL BE INSTALLED ON THE [illegible] AND [illegible] ALL BAFFLES.
4. POLLUTION RETARDANT BAFFLE [illegible] BE FASTENED [illegible] PLACE [illegible] 3/8"x4" STAINLESS STEEL "RED HEADS", OR APPROVED EQUAL.
5. ALL EXFILTRATION TRENCHES SHALL HAVE A POLLUTION RETARDANT [illegible] AT EACH CONNECTION POINT TO A CATCH BASIN [illegible] EXFILTRATION TRENCH DETAIL).
6. FIBERGLASS BAFFLES ARE NOT PERMITTED.
7. MOUNTING BRACKETS MAY BE ADDED TO FLAT BARS TO [illegible] INSTALLATION IN ROUND STRUCTURES. SPACING TO MATCH HOLES IN FLAT BARS.

POLLUTION RETARDENT BAFFLE DETAIL

SCALE: NONE

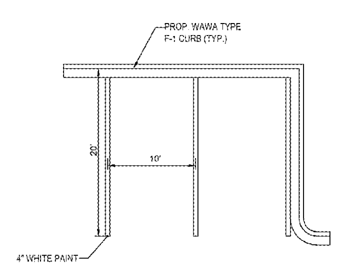

STANDARD PARKING SPACE DETAIL (SEE PLAN)
NOT TO SCALE

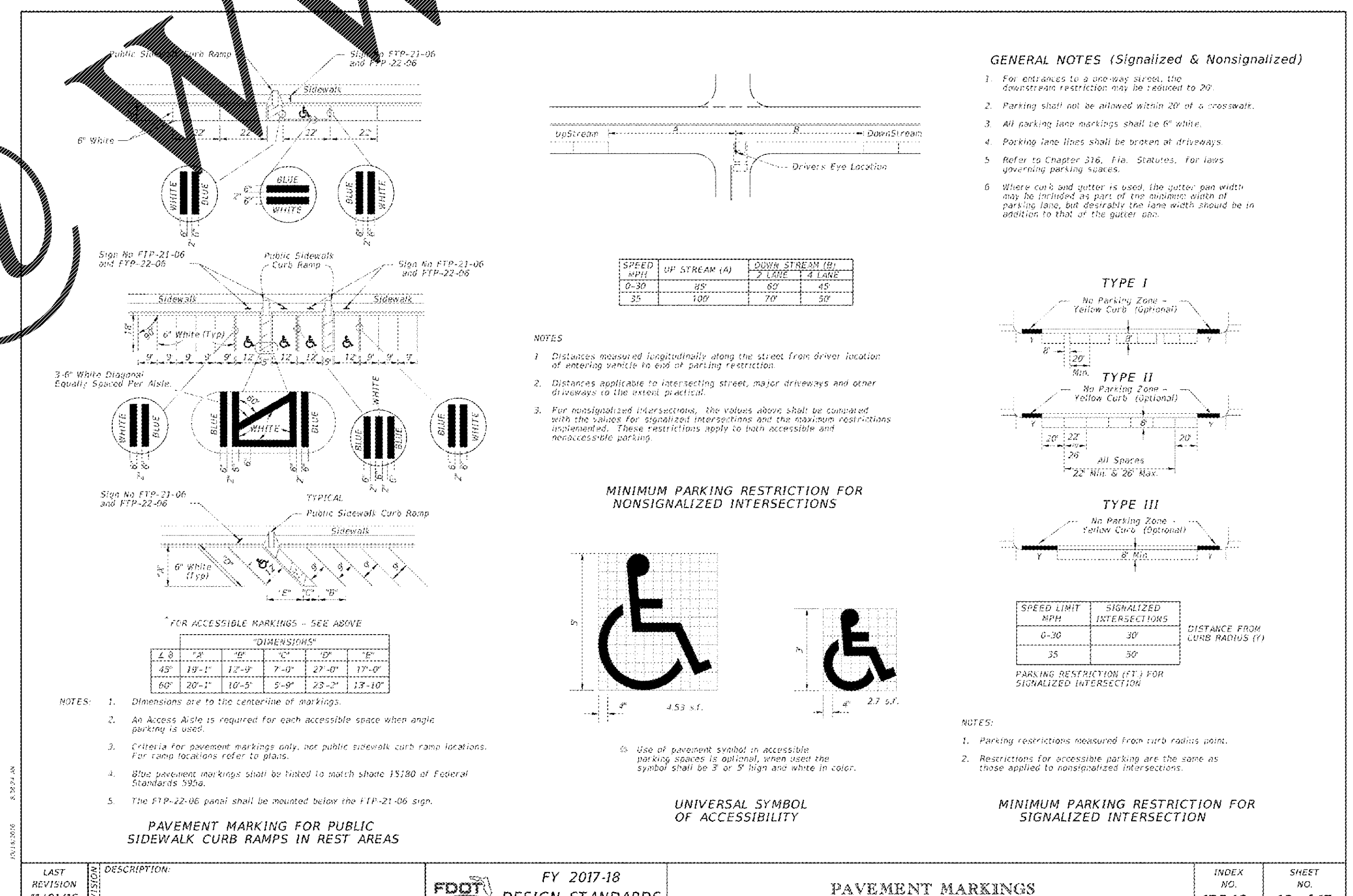

* FOR ACCESSIBLE MARKINGS - SEE ABOVE

∠θ	"A"	"B"	"C"	"D"	"E"
	"DIMENSIONS"				
45°	19'-1"	12'-9"	7'-0"	27'-0"	17'-0"
60°	20'-1"	10'-5"	5'-9"	23'-2"	13'-10"

NOTES:

1. Dimensions are to the centerline of markings.
2. An Access Aisle is required for each accessible space when angle parking is used.
3. Criteria for pavement markings only, not public sidewalk curb ramp locations. For ramp locations refer to plans.
4. Blue pavement markings shall be tinted to match shade 15180 of Federal Standards 595a.
5. The FTP-22-06 panel shall be mounted below the FTP-21-06 sign.

PAVEMENT MARKING FOR PUBLIC SIDEWALK CURB RAMPS IN REST AREAS

SPEED MPH	UP STREAM (A)	DOWN STREAM (B) 2 LANE	DOWN STREAM (B) 4 LANE
0-30	85'	60'	45'
35	100'	70'	50'

NOTES

1. Distances measured longitudinally along the street from driver location of entering vehicle to end of parking restriction.
2. Distances applicable to intersecting street, major driveways and other driveways to the extent practical.
3. For nonsignalized intersections, the values above shall be compared with the values for signalized intersections and the maximum restrictions implemented. These restrictions apply to both accessible and nonaccessible parking.

MINIMUM PARKING RESTRICTION FOR NONSIGNALIZED INTERSECTIONS

Use of pavement symbol in accessible parking spaces is optional, when used the symbol shall be 3' or 5' high and white in color.

UNIVERSAL SYMBOL OF ACCESSIBILITY

GENERAL NOTES (Signalized & Nonsignalized)

1. For entrances to a one-way street, the downstream restriction may be reduced to 20'.
2. Parking shall not be allowed within 20' of a crosswalk.
3. All parking lane markings shall be 6" white.
4. Parking lane lines shall be broken at driveways.
5. Refer to Chapter 316, Fla. Statutes, for laws governing parking spaces.
6. Where curb and gutter is used, the gutter pan width may be included as part of the minimum width of parking lane, but desirably the lane width should be in addition to that of the gutter pan.

SPEED LIMIT MPH	SIGNALIZED INTERSECTIONS
0-30	30'
35	50'

DISTANCE FROM CURB RADIUS (Y)

PARKING RESTRICTION (FT.) FOR SIGNALIZED INTERSECTION

NOTES:

1. Parking restrictions measured from curb radius point.
2. Restrictions for accessible parking are the same as those applied to nonsignalized intersections.

MINIMUM PARKING RESTRICTION FOR SIGNALIZED INTERSECTION

LAST REVISION	REVISION	DESCRIPTION:	FDOT		INDEX NO.	SHEET NO.
11/01/16			FY 2017-18 DESIGN STANDARDS	PAVEMENT MARKINGS	17346	15 of 17

BOHLER ENGINEERING

SITE CIVIL AND CONSULTING ENGINEERING
LAND SURVEYING · PROGRAM MANAGEMENT · LANDSCAPE ARCHITECTURE
SUSTAINABLE DESIGN · PERMITTING SERVICES · TRANSPORTATION SERVICES

UPSTATE NEW YORK · NEW ENGLAND · BOSTON, MA · NEW YORK METRO · NEW YORK, NY · NEW JERSEY · PHILADELPHIA, PA · LEHIGH VALLEY, PA · SOUTHEASTERN, PA · REHOBOTH BEACH, DE · BALTIMORE, MD · SOUTHERN MARYLAND · NORTHERN VIRGINIA · CENTRAL VIRGINIA · RALEIGH, NC · CHARLOTTE, NC · ATLANTA, GEORGIA · TAMPA, FL · SOUTH FLORIDA

THE INFORMATION AND CONTENT OF THIS PLAN ARE PROPRIETARY AND SHALL NOT BE COPIED OR USED FOR ANY PURPOSE WITHOUT PRIOR WRITTEN AUTHORIZATION FROM BOHLER ENGINEERING. ONLY APPROVED, SIGNED AND SEALED PLANS SHALL BE UTILIZED FOR CONSTRUCTION PURPOSES © 2016 BOHLER ENGINEERING

REVISIONS

REV	DATE	COMMENT	BY
1	8/9/2016	PER CITY COMMENTS	SMT
2	10/20/2016	REVISIONS PER SFWMD COMMENTS	SMT
3	4/10/2017	PER FDOT AND SFWMD COMMENTS	DJE
4	4/24/2017	PER CITY OF FORT PIERCE COMMENTS	SGM
5	5/12/2017	PER CITY OF FORT PIERCE COMMENTS	SGM
6	6/21/2017	PER FDOT COMMENTS	SGM
7	7/14/2017	PER FDOT COMMENTS	SGM

811 KNOW WHAT'S BELOW ALWAYS CALL 811 BEFORE YOU DIG
It's fast. It's free. It's the law.
www.callsunshine.com

APPROVED FOR CONSTRUCTION

PROJECT No.:	FLB15009
DRAWN BY:	DJE
CHECKED BY:	CR
DATE:	06/24/16
SCALE:	
CAD I.D.:	SD3

PROJECT: SR 70 AND JENKINS FOR WAWA

Wawa

LOCATION OF SITE
SEC SR 70 & S JENKINS RD
FORT PIERCE, FLORIDA

BOHLER ENGINEERING
2255 GLADES ROAD, SUITE 305E
BOCA RATON, FLORIDA 33431
Phone: (561) 571-0280
Fax: (561) 571-0281
FLORIDA BUSINESS CERT. OF AUTH. No. 30780
LANDSCAPE ARCHITECT BUSINESS LIC. No LC26000551

SHEET TITLE:
CONSTRUCTION DETAILS

SHEET NUMBER:
D-2

Order Plans @ WWW.LDILine.com