PU DETAIL NO. 15-4 — VALVE BOX

REVISED: DATE / / | PU DETAIL NO. 15-4
APPROVED: 04/13/01 DATE | GARY L. JONES, P.E. ENGINEERING MANAGER

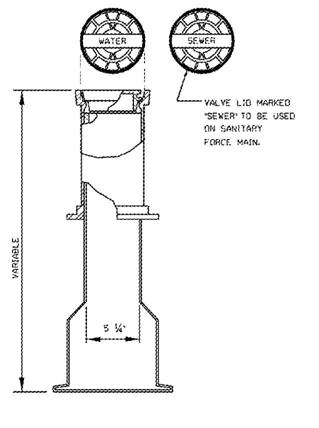

NOTE:
1. BUFFALO PATTERN, TWO-PIECE SLIDING TYPE, ADJUSTABLE VALVE BOX, 5 1/4" SHAFT.

VALVE BOX
NOT TO SCALE

VALVE BOX

CITY OF VIRGINIA BEACH • DEPARTMENT OF PUBLIC UTILITIES

PU DETAIL NO. 15-5 — VALVE STEM EXTENSION

REVISED: DATE / / | PU DETAIL NO. 15-5
APPROVED: 04/13/01 DATE | GARY L. JONES, P.E. ENGINEERING MANAGER

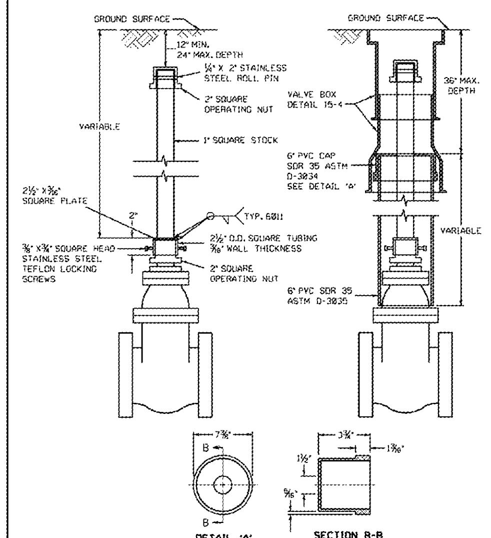

SCALE: NTS

VALVE STEM EXTENSION

CITY OF VIRGINIA BEACH • DEPARTMENT OF PUBLIC UTILITIES

PU DETAIL NO. 16-1 — DETECTOR CHECK AND DOMESTIC METER LAYOUT

REVISED: DATE / / | PU DETAIL NO. 16-1
APPROVED: 04/13/01 DATE | GARY L. JONES, P.E. ENGINEERING MANAGER

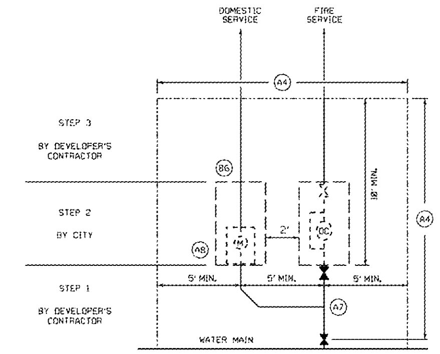

NOTES:
1. DETECTOR CHECK (DC) VAULT SIZE = 36" x 60"
WATER METER (M) VAULT SIZE = UP TO 1" LINE = MBX-1
> 1" AND ≤ 2" = 18" x 36"
> 3" = 36" x 60"
2. SEE PU DETAIL NO. 16-2

DETECTOR CHECK AND DOMESTIC METER LAYOUT

CITY OF VIRGINIA BEACH • DEPARTMENT OF PUBLIC UTILITIES

PU DETAIL NO. 16-2

REVISED: 10/17/2012 DATE | PU DETAIL NO. 16-2
APPROVED: 04/13/01 DATE | ROBERT E. CLARK ENGINEERING MANAGER

DETECTOR CHECK/DOMESTIC METER STANDARD RESPONSIBILITY

Engineer's responsibility (design)

A1. Determine domestic and fire flow requirements.
A2. Design public side so as not to conflict with existing and proposed utilities.
A3. Use tees for same size taps, i.e. 8" x 8
A4. Provide easement as necessary. A 15'x 15' minimum maintenance area is required. This is to include right of way and easement area. Any required easement shall be dedicated and recorded prior to installation of the detector check and domestic meter assemblies.
A5. Maximum depth of service lines in the maintenance area shall be 36". Fire service and/or domestic service larger than 2" shall have from 30" to 36" of cover from finished grade at the box. Curb stops for domestic meters 1" and smaller shall have 12" of cover from finished grade at the box. Curb stops for 1 1/2" and 2" domestic meters shall have 12" to 14" of cover from finished grade at the box.
A6. Lines 2" and smaller shall be type 'K' soft copper. 3" lines may be either type 'K' soft copper or ductile iron. Lines 4" and larger shall be ductile iron.
A7. A corporation stop shall be installed for all service lines 2" and smaller. Either a tapped tee or double strap service clamp (tapping saddle) from the PU Approved Products List shall be used for 1 1/2" or 2" taps. A branch valve shall be installed on all ductile iron domestic service lines (not shown in PU Detail No. 16-1).
A8. Flanged locking type curb stops shall be used for 1 1/2" and 2" domestic meters. Locking type curb stops shall be used for 5/8" and 1" domestic meters. Service lines larger than 2" shall be capped or plugged.
A9. Boxes shall not be located in paved areas, swales or berms.
A10. Provide a site specific detail of the detector check installation on the plan. Show all existing and proposed utilities in plan and profile.
A11. 90 degree bends shall not be used.

Owner's/Contractor's responsibility (construction)

B1. If public water main shut down is required, PU Inspections must be contacted to schedule the shut down.
B2. Install all pipe work in sequence shown on detail. Until installation of the detector check and domestic meter have been performed, a minimum 10' gap shall be maintained between the valve on the fire service line and any private fire service piping installed. Similarly, the 10' gap shall be maintained between the curb stop on the domestic service line and any private domestic service piping installed.
B3. Test the public mains as directed by PU Inspections.
B4. Excavate areas where detector check and domestic meter are to be installed. Excavated areas shall be maintained until installation of the detector check and domestic meter is completed (Note: see A4). Provide finished grade stakes on either side of the work area. Install 8" of #57 stone base within excavations. Finished grade of #57 stone shall be below bottom of pipe.
B5. Call 385-4171 to schedule onsite meeting with PU Inspections and Operations for approval to have detector check/domestic meter installed. Call 385-1400 for detector check/domestic meter installation once onsite meeting has been conducted and public mains have been released.
B6. Connect on-site utilities to the detector check and/or domestic meter assembly.
B7. Contact PU Customer Service to activate the system.
B8. Set meter boxes/vaults to finished grade.

City's responsibility

C1. Provide detector check vault, domestic meter box/vault, and one course of block for Owner/Contractor to install.
C2. Install detector check and domestic meter assembly.

DETECTOR CHECK AND DOMESTIC METER LAYOUT

CITY OF VIRGINIA BEACH • DEPARTMENT OF PUBLIC UTILITIES

...\20010413-PUD-Engineering-Detec 10/19/2012 4:05:43 PM

PU DETAIL NO. 23 — VERTICAL OFFSET WATER AND SANITARY SEWER FACILITIES

REVISED: DATE / / | PU DETAIL NO. 23
APPROVED: 04/13/01 DATE | GARY L. JONES, P.E. ENGINEERING MANAGER

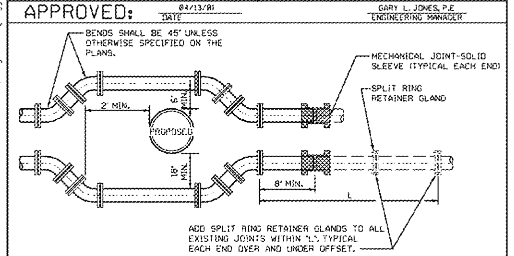

SIZE (DIA.-INCHES)	4"	6"	8"	10"	12"	16"	18"	20"	24"
LENGTH ("L"-FEET)	12'	17'	22'	26'	31'	39'	43'	47'	55'

*DESIGN CONDITION
PRESSURE - 150 PSI
SOIL TYPE - SILT
DEPTH OF COVER - 3 FEET

NOTES:
1. RETAINER GLANDS ARE REQUIRED AT EACH FITTING.
2. ALL PIPE AND FITTINGS SHALL BE DUCTILE IRON, MECHANICAL JOINT, CLASS 52 (MIN.). WATER MAIN AND FITTINGS SHALL BE CEMENT MORTAR LINED.
3. FOR 12" AND SMALLER LINES, MECHANICAL JOINT OFFSET FITTINGS MAY BE USED IN LIEU OF THE 45° BENDS SHOWN SUBJECT TO THE APPROVAL OF THE ENGINEER. IF USED, THE OFFSETS MUST RESULT IN THE CLEARANCES SHOWN BEING MET OR EXCEEDED.
4. EXISTING C.I. PIPE SHALL BE REPLACED WITH AN 8' MINIMUM LENGTH OF D.I. PIPE AT BOTH ENDS OF THE OFFSET AND RETAINER GLANDS INSTALLED.
5. THE EXISTING PIPE SHALL HAVE ALL JOINTS WITHIN THE LENGTH "L" RESTRAINED BY ADDING A SPLIT RING RETAINER GLAND ("MEG-A-LUG" OR EQUAL) WITH BOLTS TO THE M.J. BELL.
6. LENGTH "L" IN FEET SHALL CONFORM TO THE TABLE ABOVE.
7. SPLIT RING RETAINER GLANDS ARE FOR USE ON DUCTILE IRON MECHANICAL JOINT PIPE ONLY. IF EXISTING PIPE IS ANY OTHER MATERIAL, REMOVE AND REPLACE WITH D.I. MECHANICAL JOINT PIPE FOR THE LENGTH "L" SPECIFIED*.
8. * REQUIRED RESTRAINING LENGTH (L) APPLIES FOR DESIGN CONDITION SPECIFIED.

VERTICAL OFFSET WATER AND SANITARY SEWER FACILITIES

CITY OF VIRGINIA BEACH • DEPARTMENT OF PUBLIC UTILITIES

PU DETAIL NO. 18-1 — FIRE HYDRANT SETTING

REVISED: DATE / / | PU DETAIL NO. 18-1
APPROVED: 04/13/01 DATE | GARY L. JONES, P.E. ENGINEERING MANAGER

COLOR CODE

OWNER	BONNET	CAPS	BARREL
CITY	White	White	Red
CITY (COUNTER-CLOCKWISE)	Yellow	Yellow	Red
PRIVATE	Blue	Blue	Red
PRIVATE (COUNTER-CLOCKWISE)	Blue	Yellow	Red
DRY (DRAFTING)	Blue	Blue	Blue

HYDRANT PAINT

A. RUST-OLEUM #7792 GLOSS WHITE, OR EQUAL
B. RUST-OLEUM #7265 REGAL RED, OR EQUAL
C. RUST-OLEUM #7743 LEMON YELLOW, OR EQUAL
D. PENNSBURY CORPORATION #3-A-19 STRATOLUME NASSAU BLUE, OR EQUAL

NOTE:
HYDRANT SHALL BE VERTICALLY PLUMB, PUMPER CONNECTION SHALL FACE 90° TO STREET (C UNLESS OTHERWISE SPECIFIED.

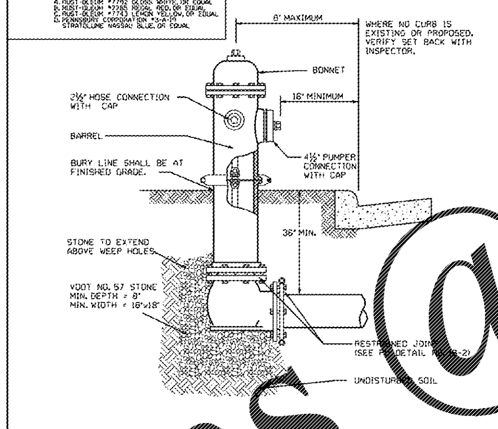

FIRE HYDRANT SETTING

CITY OF VIRGINIA BEACH • DEPARTMENT OF PUBLIC UTILITIES

City of Virginia Beach — Fire Prevention Bureau

City of Virginia Beach

VIRGINIA BEACH FIRE PREVENTION BUREAU
(757) 385-4228 OFFICE
(757) 385-5676 FAX

FIRE PREVENTION BUREAU- MARKED FIRE LANE REQUIREMENTS

Chapter 5, section 503 of the Virginia Statewide Fire Prevention Code (SFPC) as adopted by the City of Virginia Beach Article III, section 12-41, authorizes the Fire Code Official to require and designate fire department access roads on all proposed and existing public and private roadways as deemed necessary per the fire codes and fire department policies. This is to provide unobstructed access for firefighting apparatus and to prevent parking in front of or adjacent to fire hydrants.

Markings and signs are to be provided and maintained by the owner or agent of the owner of the property involved, be it private or public.

Existing buildings - The fire code official is authorized to designate public and private fire lanes as deemed necessary for the efficient and effective operation of fire apparatus. Marked fire lanes shall comply with the following specifications. SFPC 503.

Dimensions

Street width	Parking	Fire Lane Markings
20 feet – 26 feet	No parking allowed on either side	Fire lanes on both sides of street
Over 26 feet - up to 34 feet	Parallel parking allowed on one side as determined by the fire code official.	Fire lane on one side of street
34 feet and greater	Parallel parking allowed on both sides	Marked Fire lane not required

Curb and Pavement Markings
1. The curb lines shall be painted hot traffic yellow.
2. Without curbs- six inch hot traffic yellow border shall be applied parallel to the roadway, at the edge of the pavement.
3. Exception- painting of curbs will not be required in single family residential sub-divisions.

Approved Signs (required in all fire lane areas)
1. The sign shall be 18" h x 12" w in size and shall be made with an approved metal material.

Page | 1

2. Approved colors: Red letters and arrow on white background.
3. Wording: NO PARKING FIRE LANE TOWING ENFORCED
4. Line spacing- 1/4-inch
5. "NO PARKING FIRE LANE"- 2-inches in height
6. "TOWING ENFORCED"- 1-inch in height
7. Red Arrow symbol- 8-inches wide; arrows pointing to indicate the area designated as fire lane, see example.
8. Border- 3/8" red stripe around the entire outer edge of the sign.

Examples

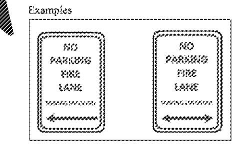

Sign Locations

1. A sign shall be positioned at the beginning and end of the fire lane and at 100 foot intervals throughout the fire lane or as designated by the fire official.
2. Where fire lanes are less than 50 feet in length, a single sign positioned in the center is permissible with arrows pointing in both directions.
3. Signs shall be mounted on posts and must not exceed a setback of 6 feet from the curb or edge of the roadway. The sign shall be positioned where clearly visible to traffic.
4. The sign is to be mounted not less than 7 feet from the ground to the bottom of the sign, unless otherwise directed.
5. Signs shall not be obscured from view by bushes, shrubs, building features, etc.

Page | 2

Pavement Patching Detail for Flexible Pavement (C-3)

● ROADWAY RECONSTRUCTION - IS DEFINED AS A RECONSTRUCTION OF PAVEMENT THAT HAS BEEN REMOVED TO SUCH EXTENT THAT THIS PAVEMENT PATCH CANNOT BE USED. IN THE CASE OF ROADWAY RECONSTRUCTION, THE CONSULTING ENGINEER SHALL DESIGN THE PAVEMENT THICKNESS BASED ON THE CBR, ETC. OF THE SOIL TO GO BACK IN THE TRENCH. SEE SECTION 5.12 OF D.P.W. SPECIFICATIONS AND STANDARDS, AND ROADWAY PATCH DEFINITION TO THE RIGHT.

● ROADWAY PATCH - IS DEFINED AS A REPAIR OF A PAVEMENT CUT THAT DOES NOT EXCEED 15' WIDE WHEN CROSSING THE ROADWAY OR UP TO A 15' x 15' SQUARE. A PATCH MAY ALSO BE DEFINED AS RUNNING PARALLEL TO ROADWAY WITH THE WIDTH < 1 TRAVEL LANE AND < (APPROX.) 500' IN LENGTH. APPROX. MORE EXTENSIVE PAVEMENT CUTS ARE CONSIDERED ROADWAY RECONSTRUCTION. SEE BELOW.

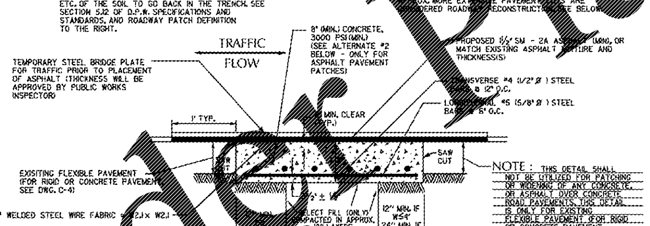

NOTE : THIS DETAIL SHALL NOT BE UTILIZED FOR PATCHING OR WIDENING OF ANY CONCRETE, OR ASPHALT OVER CONCRETE ROAD PAVEMENTS. THIS DETAIL IS ONLY FOR EXISTING FLEXIBLE PAVEMENT. (FOR RIGID OR CONCRETE PAVEMENT, SEE DWG. C-4)

ALTERNATIVE #2 - FOR ASPHALT (FLEXIBLE) PAVEMENTS ONLY

ROADWAY PATCH FOR ASPHALT (ONLY) RESIDENTIAL STREETS AND CUL-DE-SACS SHALL BE THE GREATER OF :

● MATCH THE EXISTING PAVEMENT, OR

● 1 1/2" SM-2A SURFACE ASPHALT CONCRETE, OVER 2" BM-1A BASE MIX ASPHALT CONCRETE, OVER 8" AGGREGATE BASE MATERIAL, TYPE I OR II, NO. 21 OR 21A, OVER COMPACTED SUBGRADE IF SUBGRADE IS A MINIMUM CBR OF 15. OTHERWISE, SELECT GRANULAR MATERIAL WITH CBR 15 TO BE USED AS BACKFILL. IF CONCRETE IS UNDER ASPHALT, THEN CONCRETE MUST BE USED AND MATCH EXISTING PAVEMENT. SEE NOTE #1.

ROADWAY PATCH FOR ASPHALT (ONLY) COLLECTOR STREETS AND MAJOR ARTERIALS SHALL BE THE GREATER OF :

● MATCH THE EXISTING PAVEMENT SECTION, OR

● 1 1/2" SURFACE ASPHALT CONCRETE, OVER 3" BM-2 BASE MIX ASPHALT CONCRETE, OVER 8" AGGREGATE BASE MATERIAL, TYPE I OR II NO. 21 OR 21A, OVER COMPACTED SUBGRADE IF SUBGRADE IS A MINIMUM CBR OF 15. OTHERWISE, SELECT GRANULAR MATERIAL WITH CBR 15 AND USE AS BACKFILL. IF CONCRETE IS UNDER ASPHALT, THEN CONCRETE MUST BE USED AND MATCH EXISTING PAVEMENT. SEE NOTE #1.

NOTES:
1) SEE CHAPTER 5 IN VA. BEACH D.P.W. SPECIFICATIONS AND STANDARDS. IN ALL CASES, IT IS ALWAYS PREFERABLE TO ACTUALLY DESIGN ANY PAVEMENT PATCH AND REPAIRS BASED ON GOOD ENGINEERING PRACTICES USING SOILS AND OTHER PERTINENT DESIGN PARAMETERS.
2) BACKFILL TO BE SELECT GRANULAR MATERIAL (CBR ≥ 15) COMPACTED IN 12" LAYERS TO 3' BELOW PAVEMENT AND THEN IN 6" LAYER THEREAFTER TO 95% OF THE ASTM D-698 MAXIMUM THEORETICAL DENSITY.
3) THE ASPHALT STREET OVERLAY MAY BE INCLUDED IN THE CONCRETE PAVEMENT PATCH DESIGN BY THE CONSULTANT SHOULD THE OPTION TO DESIGN THE PATCH BE CHOSEN

(N.T.S.) REV. 2/99

CITY OF VIRGINIA BEACH
STANDARD
PAVEMENT PATCHING DETAIL FOR FLEXIBLE PAVEMENT
PUBLIC WORKS | C-3

DSC FILE #F07-004902-SP

Issued:		Date:
A	BID SET	08/23/17
B		
C		
D		

Revisions:		Date:
1	ADDRESSED CITY COMMENTS	05/11/2017
2	ADDRESSED CITY COMMENTS	07/11/2017
3		
4		
5		

COMMONWEALTH OF VIRGINIA
MARK R. BOYD
Lic. No. 045699
07/11/17
PROFESSIONAL ENGINEER

Seal

PROJECT ARCHITECT/ENGINEER DATE
PROJECT LEAD DATE
PROJECT DESIGNER DATE

Kimley»Horn
Kimley-Horn and Associates, Inc.
1700 Willow Lawn Drive, Suite 200
Richmond , Virginia 23230
(804) 673-3882

ALDI Inc.
804 Moorefield Park Drive, Suite 302
Richmond, Virginia 23236
(804) 594-5278

ALDI Inc.
Virginia Beach Blvd & Thalia Road
Virginia Beach, VA
Project Name & Location:

UTILITY DETAILS
Drawing Name:

Date: 02/08/17
Project No. 113180024
Type:
Drawn By: SMP
Scale: As Noted
CU-502
Drawing No.

Order Plans @ WWW.LDILine.com