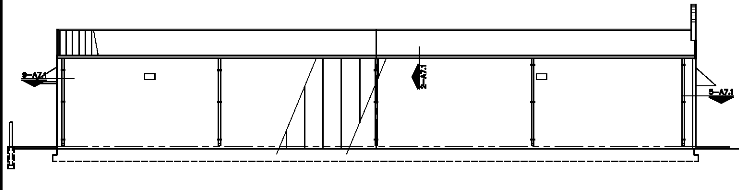

SIDE ELEVATION

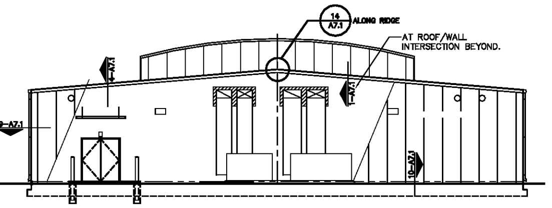

REAR ELEVATION

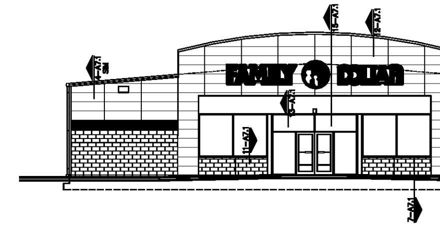

FRONT ELEVATION

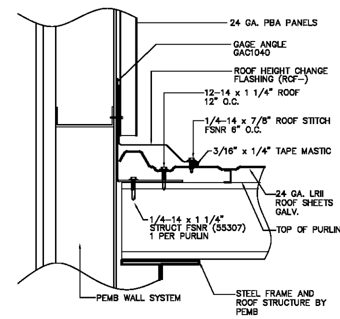

1 PARAPET/ROOF FLASHING
NTS

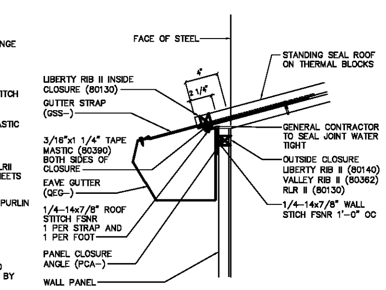

2 EAVE GUTTER DETAIL
NTS

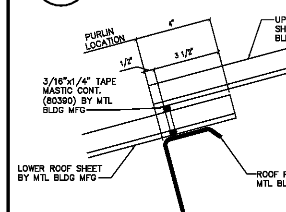

3 ROOF PANEL JOINT DETAIL
NTS

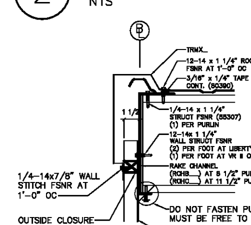

4 WALL EAVE DETAIL
NTS

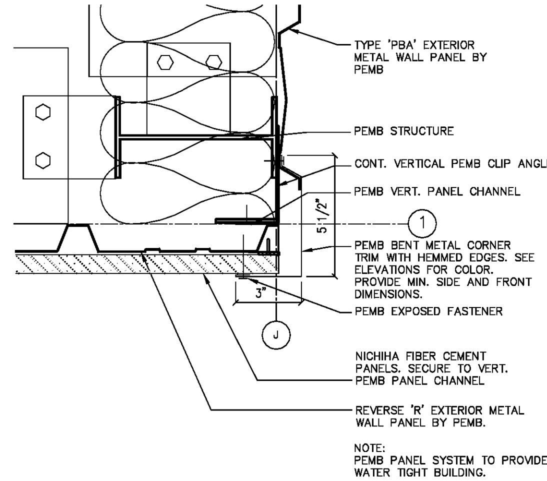

5 PEMB CORNER DETAIL
3" = 1'-0"

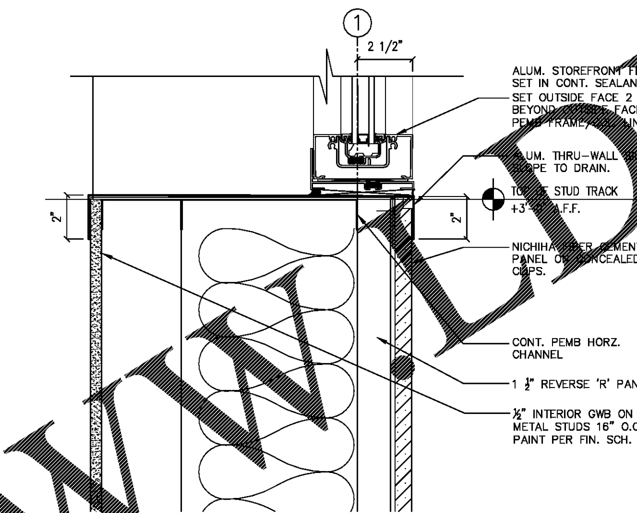

11 WINDOW SILL DETAIL
3" = 1'-0"

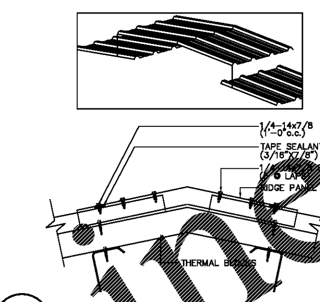

14 RIDGE ROOF DETAIL
NTS

FIBER CEMENT PANEL NOTES (NICHIHA):

NOTE 1: PRODUCTS (18"X6'-0" PANEL SIZE)
-NICHIHA CINDER BLOCK-BROWN – EDA621E
-NICHIHA ILLUMINATIONS LARGE BLOCK PRE-FINISHED IN FAMILY DOLLAR RED (SW 4081)
-NICHIHA TUFFBLOCK LARGE BLOCK PRE-FINIHSHED IN FAMILY DOLLAR LIGHT TAN (SW 61480WOOL SKEIN) CONTACT-family Dollar Rep.-770-805-9466-familydollar@nichiha.com

NOTE 2: PROVIDE: "ULTIMATE" STARTER TRACK FA700 TO START PANEL INSTALLATION.

NOTE 3: PROVIDE:
-"ULTIMATE" CLIPS FOR ILLUMINATION AND TUFFBLOCK – JEL777.
-"ULTIMATE" CLIPS FOR CINDER BLOCK – JEL787.

NOTE 4: CONTROL JOINTS REQUIRED EVERY 30'-0" (FOR CONTINUOUS WALL SPANS OVER 50'-0") USING NICHIHA DOUBLE FLANGE BACKER FHK1020.

NOTE 5: PROVIDE SINGLE FLANGE BACKER (FHK1017R) WHERE PANELS TERMINATE INTO METAL TRIM. PROVIDE DOUBLE FLANGE BACKER WHERE PANELS BUTT EACH OTHER.

NOTE 6: USE 1/2" CORRUGATED SHIM (FS1010) WHERE PANELS NEED TO BE FACE FASTENED.

NOTE 7: USE ASTM C920 APPROVED CAULK ON ALL SEALANT BACKERS. (NOT PROVIDED BY NICHIHA)

NOTE 8: FOR WIND EXPOSURE "B" AREAS OR LESS:
-PROVIDE PEMB VERTICAL REVERSE 'R' PANELS, MIN. 24 GA, 50 KSI YIELD STRENGTH METAL PANELS WITH RIBS SPACED NO MORE THAN 12" O.C. WITH A MINIMUM NICHIHA DEFLECTION CRITERIA FOR FULLY ENCLOSED PEMB STRUCTURE OF L/120.

NOTE 9: FOR WIND EXPOSURE AREAS 'C' OR GREATER:
-NICHIHA PANELS MUST BE INSTALLED OVER AN ADDITIONAL SHEATHED WALL SYSTEM. CONSULT WITH NICHIHA FOR MORE DETAILS.

METAL BUILDING NOTES:

NOTE 1: PROTOTYPE METAL BUILDING DETAILS ARE PROVIDED TO SHOW DESIGN INTENT ONLY. PEMB SHALL DETERMINE FINAL DETAILS TO PROVIDE INTENT INDICATED.

NOTE 2: PROTOTYPICAL LAYOUTS ARE FOR THE 102x90 9180 SF ELEVATION PROTOTYPE

NOTE 3: DESIGN INTENT IS BASED ON METAL PANELS AND DETAILING PER MATERIALS SUPPLIED BY VP BUILDINGS. OTHER METAL BUILDING SUPPLIERS MAY HAVE DIFFERING STANDARD MATERIALS AND DETAILING VP BUILDINGS MAY PROVIDE DIFFERING PROJECT SPECIFIC DETAILS.

NOTE 4: REFER TO DOCUMENTS PROVIDED BY THE MTL. BLDG. MFR. FOR PROJECT SPECIFIC DETAILS.

NOTE 5: THE ARCHITECT SHALL COORDINATE PROJECT SPECIFIC METAL BUILDING DETAILS WITH OTHER ELEMENTS OF THE WORK.

NOTE 6: STRUCTURES WITH MASONRY SHALL BE LIMITED TO L/240 DRIFT.

8 NOTES

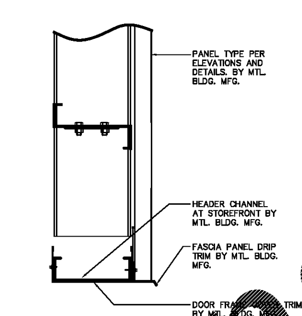

6 DOOR HEAD DETAIL
NTS

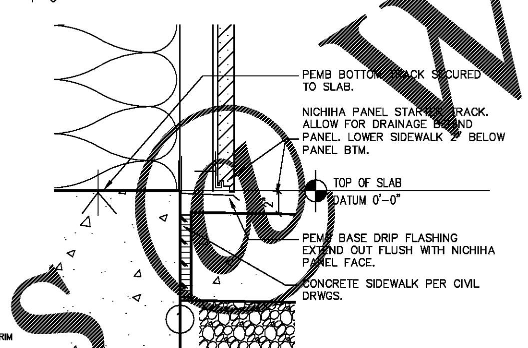

7 NICHIHA/SLAB DETAIL
3" = 1'-0"

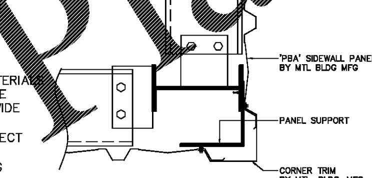

9 PEMB CORNER DETAIL
NTS

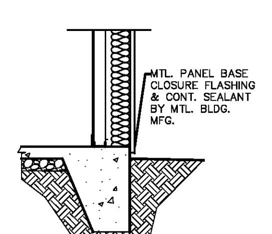

10 PEMB SLAB EDGE DETAIL
NTS

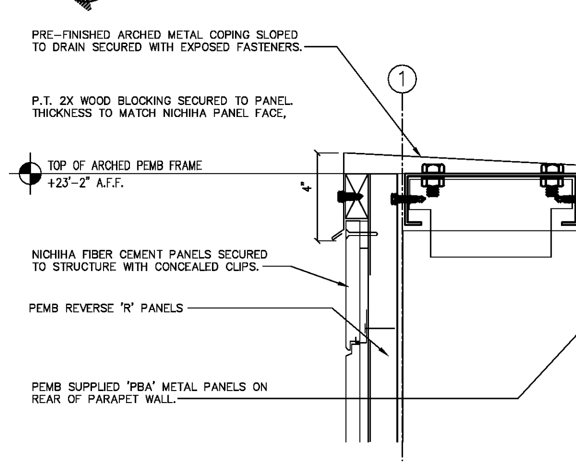

12 FRONT WALL SECTION
NTS

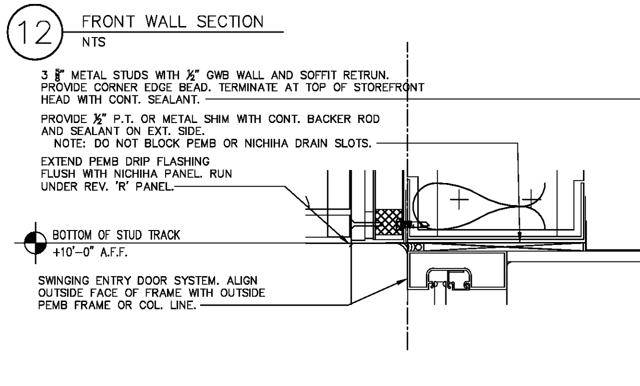

13 FRONT WALL SECTION
NTS

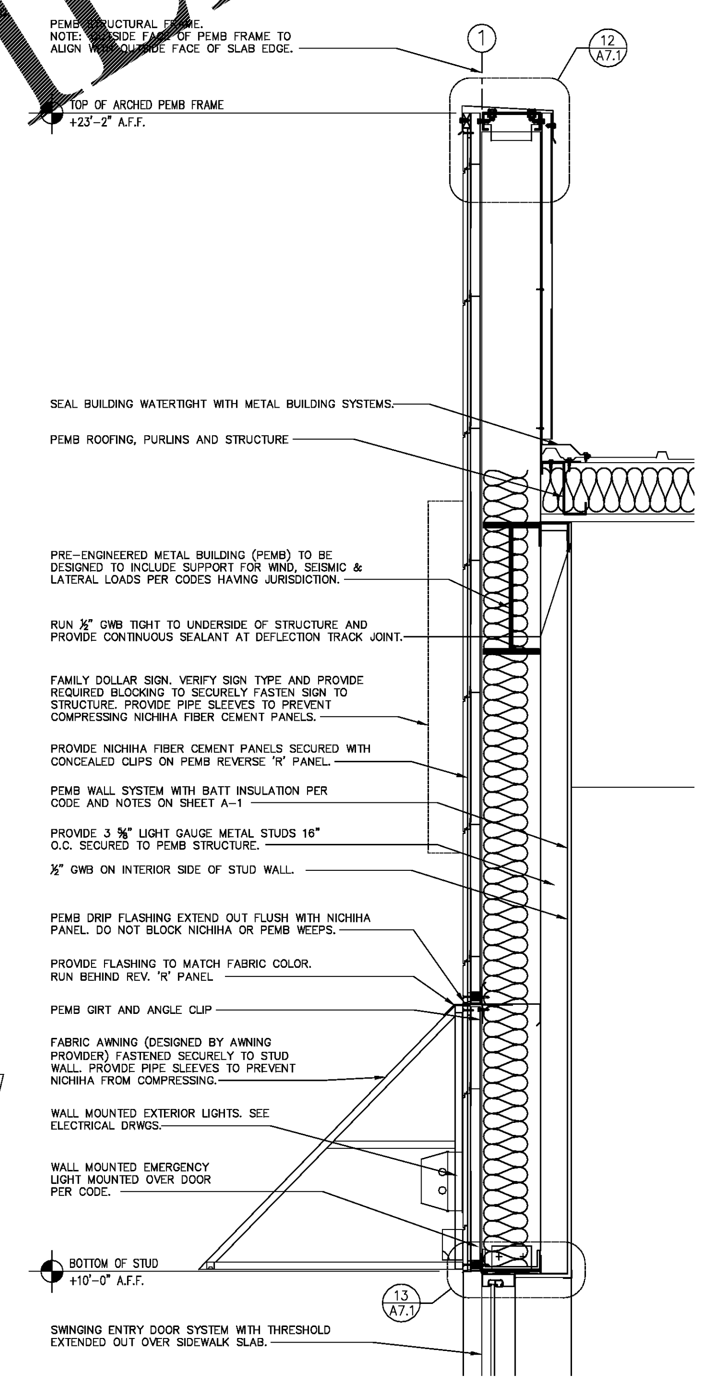

15 FRONT WALL SECTION
1" = 1'-0"

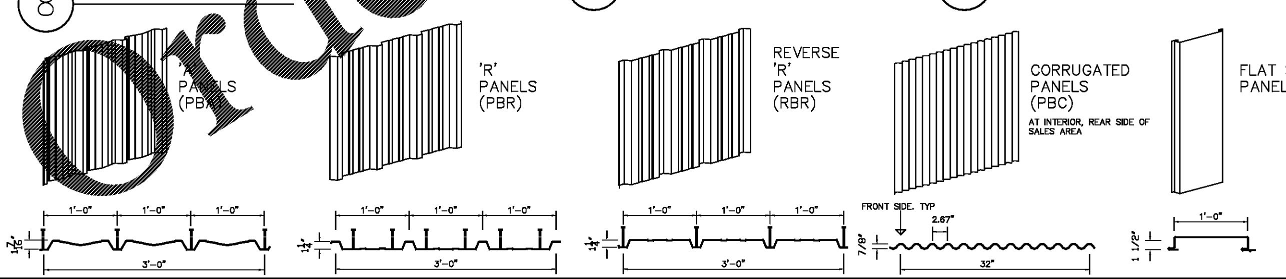

PRINTED: 6/22/2017 5:12 PM BY: Travis Spikes LAST SAVED: 6/22/2017 5:05 PM BY: Travisspikes
q:\family dollar\r2017.0123 greenville sc – white horse – durban\drawings\arch\sheets\a071.dwg

pb2 architecture + engineering
Ajax Avenue Suite 100
Rogers Arkansas 72758
Phone: 479.636.3545
Fax: 479.636.1209

Architect of Record
William Douglas Hurley
South Carolina License No. 6706
Firm SC License Number: 100115

STIPULATION FOR REUSE
THIS DRAWING WAS PREPARED FOR USE ON A SPECIFIC SITE AT GREENVILLE, SOUTH CAROLINA CONTEMPORANEOUSLY WITH ITS ISSUE DATE ON 06/22/17 AND IT IS NOT SUITABLE FOR USE ON A DIFFERENT PROJECT SITE OR AT A LATER TIME. USE OF THIS DRAWING FOR REFERENCE OR EXAMPLE ON ANOTHER PROJECT REQUIRES THE SERVICES OF PROPERLY LICENSED ARCHITECTS AND ENGINEERS. REPRODUCTION OF THIS DRAWING FOR REUSE ON ANOTHER PROJECT IS NOT AUTHORIZED AND MAY BE CONTRARY TO THE LAW.

FAMILY DOLLAR STORE

1145 WHITE HORSE RD.
GREENVILLE, SOUTH CAROLINA
JOB NUMBER: 2017.0123

ISSUE BLOCK

CHECKED BY:	JMJ
DRAWN BY:	JMJ
PROTO CYCLE:	2016-01
DOCUMENT DATE:	06.22.17

STATE OF SOUTH CAROLINA
PB2 Architecture + Engineering, PLLC
100115
REGISTERED ARCHITECT

METAL BUILDING TRIM DETAILS

SHEET: A7.1

Order Plans @ WWW.LDILinc.com