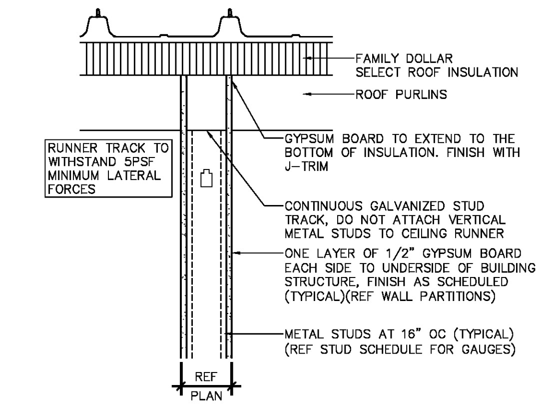

8 METAL STUD HEAD DETAIL
1 1/2" = 1'-0"

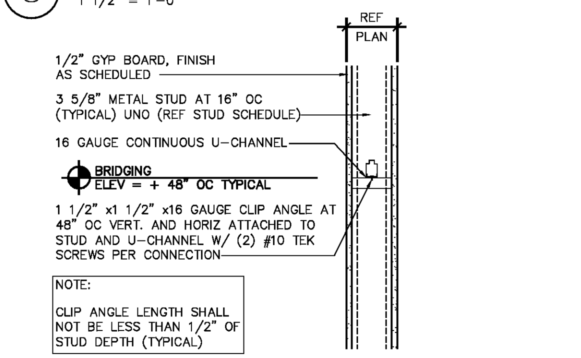

7 METAL STUD BRIDGING DETAIL
1 1/2" = 1'-0"

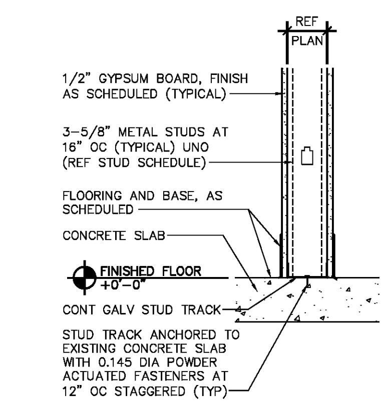

6 PARTITION DETAIL
1 1/2" = 1'-0"

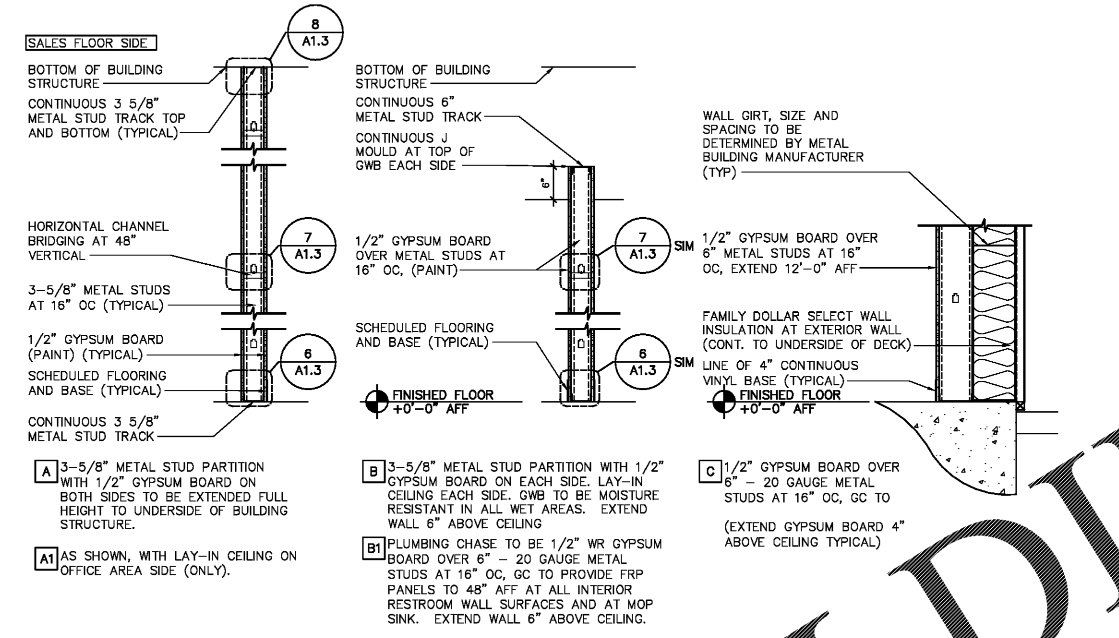

5 PARTITION TYPES
3/4" = 1'-0"

KEYNOTES

1. LINE OF SUSPENDED ACOUSTICAL LAY-IN CEILING MOUNTED AT 10'-0" AFF AT RESTROOMS, GC TO PROVIDE VINYL FACED MOISTURE RESISTANT TILES (TYPICAL EACH RESTROOM)
2. LINE OF FLOORING – REF FINISH SCHEDULE ON SHEET A1.1
3. 3'-0" x 7'-0" SOLID CORE DOOR AND FRAME, LEVER HARDWARE AND ACCESSORIES AS SCHEDULED (UNDERCUT DOOR 1" AFF)
4. GYP BOARD WALL SURFACE TO BE PAINTED REF FINISH SCHEDULE ON SHEET A1.1, GC TO PROVIDE WATER RESISTANT GYP BOARD ON ALL WET SURFACES, (TYPICAL)
5. CONTINUOUS 4" VINYL FLOOR BASE
6. FRP
7. FLOOR MOUNTED, TANK TYPE TOILET. FLUSH LEVER TO BE INSTALLED ON WIDE SIDE OF TOILET, AWAY FROM ADJACENT WALL, AS SHOWN. (TYPICAL ALL RESTROOMS)
8. WALL MOUNTED LAVATORY WITH INSULATED PIPE WRAP, ACCESSORIES AND HARDWARE
9. COMMERCIAL GRADE WALL MOUNTED ELECTRIC HAND DRYER, GC TO ENSURE HAND DRYER DOES NOT CROSS IN TO 30"x48" CLEAR FLOOR SPACE AT ACCESSIBLE LAVATORY OR PROTRUDE MORE THAN 4" FROM FACE OF WALL
10. WALL MOUNTED MIRROR WITH STAINLESS STEEL FRAME, MIRROR SHALL BE MOUNTED WITH BOTTOM EDGE OF THE REFLECTIVE SURFACE NO HIGHER THAN 40" AFF PER ADA, THE TOP OF THE REFLECTIVE SURFACE SHALL BE AT LEAST 74" AFF AT THE TOP MOST EDGE, (TYPICAL 2 RESTROOMS)
11. COMMERCIAL GRADE ROLL TYPE TOILET PAPER DISPENSER
12. WALL MOUNTED STAINLESS STEEL GRAB BARS, GC TO ENSURE ALL BLOCKING IS PROVIDED TO SUPPORT 250LB MINIMUM LOAD. REF 3-A1.3
13. SOAP DISPENSER
14. ACCESSIBILITY COMPLIANT RESTROOM SIGN – REF 15-AS1
15. FLOOR MOUNTED MOP SINK (REF MEP)
16. FOUNTAIN SPOUT HEIGHT

GENERAL NOTES

1. LAYOUT OF TOILET ROOM FACILITIES SHALL COMPLY WITH ALL APPLICABLE STATE AND LOCAL CODES, INCLUDING ALL ADA REQUIREMENTS. SUBMIT ANY MODIFIED LAYOUTS TO FAMILY DOLLAR FOR THEIR REVIEW AND APPROVAL.
2. TOILETS SHALL BE EQUIPPED WITH THE FOLLOWING ACCESSORIES FOR EACH:

   1 EA. BRADLEY #780-... #8360 FRAMED WALL MIRROR CONCEALED MOUNTING OVER EACH LAVATORY. INSTALL W/ BASE OF REFLECTIVE SURFACE @ 40" A.F.F. PER ADA REQUIREMENTS SHOWN ON THIS SHEET AND AS1.

   1 EA. TOILET TISSUE HOLDER – BRADLEY MODEL "5224" 18 GA. CHROME PLATED STEEL. INSTALL PER ADA REQUIREMENTS SHOWN ON THIS SHEET AND AS1.

   1 EA. HOOK – BRADLEY MODEL 931 MOUNTED TO DOOR FACE. MOUNTED PER ACCESSIBILITY STANDARDS. INSTALL HOOK @ 4'-0" A.F.F.

   1 EA. WALL MOUNTED GRAB BARS – BRADLEY #8320-001-18, 36, AND 42. INSTALL GRAB BARS PER ADA REQUIREMENTS SHOWN ON THIS SHEET AND AS1.

   1 EA. ELEC. HAND DRYER – "NOVA 1" BY WORLD DRYER. DRYER LOCATED PER ADA REQUIREMENTS SHOWN ON THIS SHEET AND AS1.

   1 EA. SOAP DISPENSER & SOAP BAG – KUTOL #9941GRA & 7641 – MOUNTED PER ADA REQUIREMENTS.

   1 EA. CODE APPROVED ROOM IDENTIFICATION SIGN. INSTALL PER ADA REQUIREMENTS SHOWN ON AS1.
3. INSTALL CONTINUOUS FIRE RETARDANT TREATED 2x6 BLOCKING BETWEEN STUDS FOR ALL HANDRAILS, GRAB BARS, FIXTURES, BRACKETS, ACCESSORIES, CABINETRY, AND MISC. SPECIALTIES AS REQUIRED, UNLESS NOTED OTHERWISE.
4. USE 1/2" MOISTURE RESISTANT G.W.B. (GREENBOARD) FOR TOILET ROOM WALLS.
5. DOOR HARDWARE MUST BE MOUNTED BETWEEN 34 (MIN.) & 48 INCHES (MAX.).
6. IF FLOOR DRAINS ARE REQUIRED IN RESTROOMS BY CODE, THE SLOPE WITHIN EITHER THE ADA TURNING RADIUS OR CLEAR FLOOR SPACE RECTANGLES CANNOT EXCEED 1:48.
7. PROVIDE ADA COMPLIANT ACCESSORY APRON AT HIGH WATER FOUNTAIN TO MEET PROTRUDING OBJECT REQUIREMENT 307.2 BY OASIS #035174-001. COLOR TO MATCH FOUNTAIN.

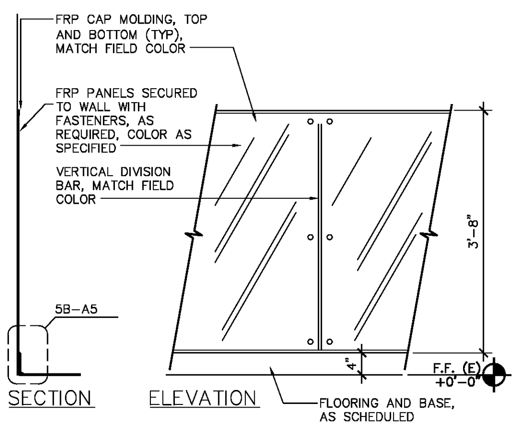

4 FRP WAINSCOT DETAIL
3/4" = 1'-0"

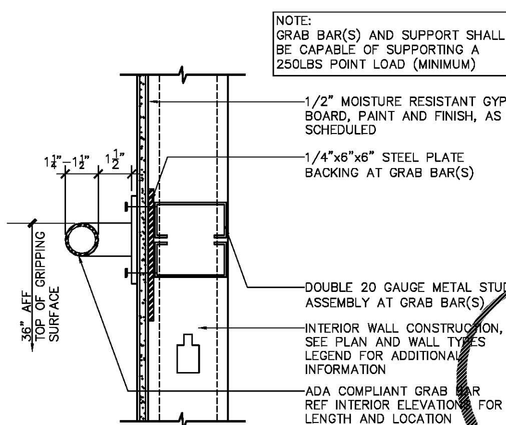

3 GRAB BAR DETAIL
3" = 1'-0"

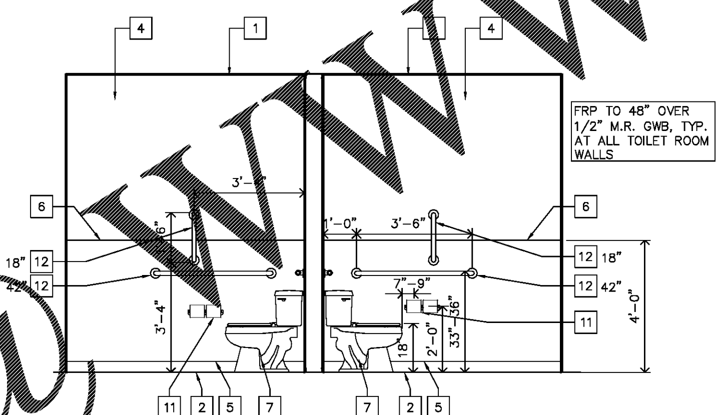

2C TYPICAL RESTROOM ELEVATION
3/8" = 1'-0"

INSTALL FRP (GLASBORD #85 – WHITE WITH PEBBLED EMBOSSED FINISH; BY CRANE COMPOSITES OR EQUAL)(FORMALLY KEMLITE) TO 4'-0" AFF ON ALL WALL SURFACES IN THE RESTROOMS. INSTALL FRP TO 4'-0" AFF BEHIND THE MOP SINK AND WATER COOLER A MINIMUM OF 1 FT TO EACH SIDE. COMPLETE FRP WITH TRIP CAP ON TOP, SIDES, CORNERS AND JOINTS, INCLUDING CAULKING AS REQUIRED BY MFG. VERIFY LOCAL CODE FOR ADDITIONAL APPLICATION IF REQUIRED

TOILET ROOM CLEAR FLOOR NOTES:

1. 30X48 CLEAR FLOOR AT LAV AND FOUNTAIN
2. 30X48 CLEAR FLOOR
3. 60X56 CLEAR FLOOR AT TOILET
4. 48X48 AT PUSH SIDE OF DOOR
5. 54X60 AT PULL SIDE OF DOOR
6. 18X18 AT TACTILE SIGNS

NOTE: HAND DRYER IS ALLOWED TO ENCROACH MAX 4" INTO CLEAR FLOOR AREA AT LAVATORY.

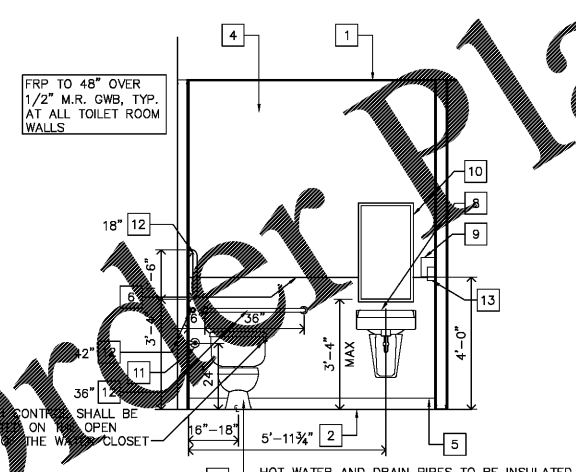

2B TYPICAL RESTROOM ELEVATION
3/8" = 1'-0"

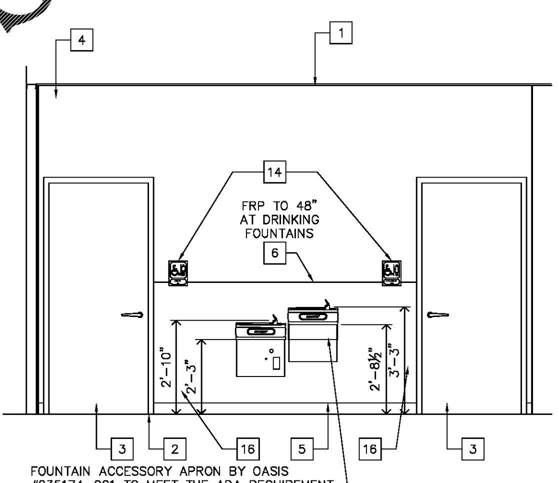

2A TYPICAL RESTROOM ELEVATION
3/8" = 1'-0"

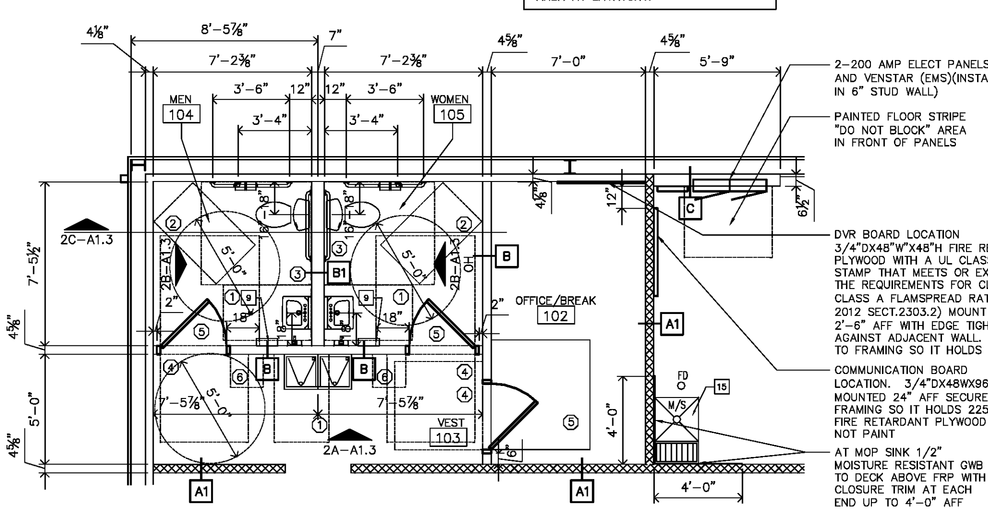

1 ENLARGED TOILET PLAN
1/4" = 1'-0"

pb2 architecture + engineering
... Ajax Avenue Suite 100
... Arkansas 72758
Phone: 479.636.3545
Fax: 479.636.1209
Architect of Record
William Douglas Hurley
South Carolina License No. 6706
Firm SC License Number: 100115

STIPULATION FOR REUSE
THIS DRAWING WAS PREPARED FOR USE ON A SPECIFIC SITE AT GREENVILLE, SOUTH CAROLINA CONTEMPORANEOUSLY WITH ITS ISSUE DATE ON 06/22/17 AND IT IS NOT SUITABLE FOR USE ON A DIFFERENT PROJECT SITE OR AT A LATER TIME. USE OF THIS DRAWING FOR REFERENCE OR EXAMPLE ON ANOTHER PROJECT REQUIRES THE SERVICES OF PROPERLY LICENSED ARCHITECTS AND ENGINEERS. REPRODUCTION OF THIS DRAWING FOR REUSE ON ANOTHER PROJECT IS NOT AUTHORIZED AND MAY BE CONTRARY TO THE LAW.

FAMILY DOLLAR STORE

1145 WHITE HORSE RD.
GREENVILLE, SOUTH CAROLINA
JOB NUMBER: 2017.0123

ISSUE BLOCK

CHECKED BY:	JMJ
DRAWN BY:	JMJ
PROTO CYCLE:	2016-01
DOCUMENT DATE:	06.22.17

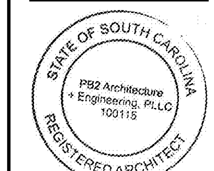

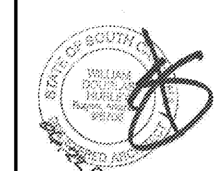

ENLARGED TOILET PLAN

SHEET: A1.3

PRINTED: 6/22/2017 5:11 PM BY: Travis Spikes LAST SAVED: 6/22/2017 5:05 PM BY: Travisspikes
q:\family dollar\r2017.0123 greenville sc – white horse – durban\drawings\arch\sheets\a013.dwg

Order Plans @ WWW.LDIline.com