INSULATED METAL PIPE THROUGH CONCRETE FLOOR/WALL OR BLOCK

CAJ 5091

F RATING = 2-HR.
T RATING = 1-HR.
L Rating At Ambient – 4 CFM/Sq Ft
L Rating At 400 F – Less Than 1 CFM/Sq Ft

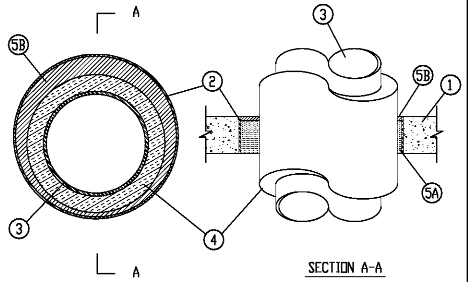

1. Floor or Wall Assembly – Min 4-1/2 in. thick reinforced lightweight or normal weight (100-150 pcf) concrete. Wall may also be constructed of any UL Classified Concrete Blocks*. Max diam of opening is 20 in.
   See Concrete Blocks (CAZT) category in the Fire Resistance Directory for names of manufacturers.
2. Metallic Sleeve – Nom 20 in. diam (or smaller) Schedule 10 (or heavier) steel pipe.
3. Through Penetrants – One metallic pipe or tubing to be installed either concentrically or eccentrically within the firestop system. Pipe or tubing to be rigidly supported on both sides of floor or wall assembly. The following types and sizes of metallic pipes or tubing may be used:
   A. Steel Pipe – Nom 12 in. diam (or smaller) Schedule 10 (or heavier) steel pipe.
   B. Copper Pipe – Nom 6 in. diam (or smaller) Regular (or heavier) copper pipe.
   C. Copper Tubing – Nom 6 in. diam (or smaller) Type L (or heavier) copper tubing
4. Pipe Covering – Nom 2 in. thick hollow cylindrical heavy density (min 3.5 pcf) glass fiber units jacketed on the outside with an all-service jacket. Longitudinal joints sealed with metal fasteners or factory-applied, self-sealing lap tape. Transverse joints secured with metal fasteners or with butt tape supplied with the product. The annular space between the insulated pipe and the edge of the periphery of the opening shall be min 1/2 in. to a max 2-1/4 in.
   See Pipe Equipment Covering – Materials – (BRGU) category in the Building Materials Directory for names of manufacturers. Any pipe covering material meeting the above specifications and bearing the UL Classification Marking with a Flame Spread Index of 25 or less and a Smoke Developed Index of 50 or less may be used.
5. Firestop System – The firestop system shall consist of the following:
   A. Packing Material – Min 4 in. thickness of min 4 pcf mineral wool batt insulation firmly packed into opening as a permanent form. Packing material to be recessed from top surface of floor or from both surfaces of wall as required to accommodate the required thickness of fill material.
   B. Fill, Void or Cavity Material* – Sealant – Min 1/2 in. thickness of fill material applied within the annulus, flush with top surface of floor or with both surfaces of wall.
      HILTI CONSTRUCTION CHEMICALS, DIV OF
      HILTI, INC. – FS-ONE Sealant

*Bearing the UL Classification Marking

METAL PIPE THROUGH CONCRETE FLOOR/WALL OR BLOCK

CAJ 1226

F RATING = 3-HR.
T RATING = 0-HR.
L Rating At Ambient – Less than 1 CFM/Sq Ft
L Rating At 400 F – 4 CFM/Sq Ft

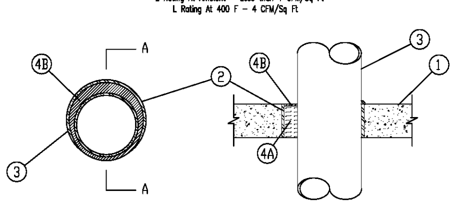

1. Floor or Wall Assembly Min 4-1/2 in. thick reinforced lightweight or normal weight (100-150 pcf) concrete. Wall may also be constructed of any UL Classified Concrete Blocks*. Max diam of opening is 32 in.
2. Metallic Sleeve (Optional) Nom 32 in. diam (or smaller) Schedule 40 (or heavier) steel sleeve cast or grouted into floor or wall assembly, flush with floor or wall surfaces.
3. Through-Penetrant One metallic pipe or conduit to be installed either concentrically or eccentrically within the firestop system. The annular space between pipe or conduit and periphery of opening shall be min 0 in. (point contact) to max 1-7/8 in. Pipe may be installed with continuous point contact. Pipe or conduit to be rigidly supported on both sides of floor or wall assembly. The following types and sizes of metallic pipes or conduits may be used:
   A. Steel Pipe Nom 30 in. diam (or smaller) Schedule 10 (or heavier) steel pipe.
   B. Iron Pipe Nom 30 in. diam (or smaller) cast or ductile iron pipe.
   C. Copper Pipe Nom 6 in. diam (or smaller) Regular (or heavier) copper pipe.
   D. Copper Tubing Nom 6 in. diam (or smaller) Type L (or heavier) copper tubing.
   E. Conduit Nom 6 in. diam (or smaller) steel conduit.
   F. Conduit Nom 4 in. diam (or smaller) steel electrical metallic tubing (EMT).
4. Firestop System The firestop system shall consist of the following:
   A. Packing Material Min 4 in. thickness of min 4 pcf mineral wool batt insulation firmly packed into opening as a permanent form. Packing material to be recessed from top surface of floor or from both surfaces of wall as required to accommodate the required thickness of fill material.
   B. Fill, Void or Cavity Material* –– Sealant Min 1/4 in. thickness of fill material applied within the annulus, flush with top surface of floor or with both surfaces of wall. At the point of continuous contact locations between pipe and concrete, a min 1/4 in. diam bead of fill material shall be applied at the concrete/pipe interface on the top surface of floor and on both surfaces of wall.
      HILTI CONSTRUCTION CHEMICALS, DIV OF
      HILTI INC – FS-One Sealant

*Bearing the UL Classification Marking

PLASTIC PIPE THROUGH 1 OR 2 HOUR GYPSUM WALL ASSEMBLY

WL 2078

System No. W-L-2078
F Ratings – 1 & 2 Hr (See Item 1)
T Ratings – 1 & 2 Hr (see Item 1)

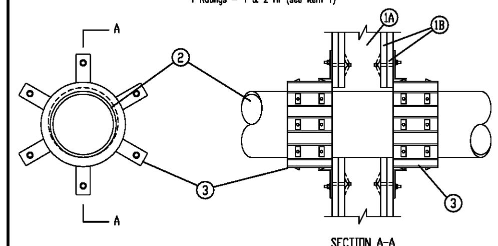

1. Wall Assembly The fire-rated gypsum board/stud wall assembly shall be constructed of the materials and in the manner specified in the individual U300 or U400 Series Wall and Partition Designs in the UL fire Resistance Directory and shall include the construction features noted below. The hourly F Rating and T Rating of the firestop system is equal to the hourly fire rating of the wall assembly in which it is installed:
   A. Studs Wall framing may consist of either wood studs or steel channel studs. Wood studs to consist of nom 2 by 4 in. lumber spaced 16 in. OC. Steel studs to be min 2-1/2 in. wide and spaced max 24 in. OC.
   B. Gypsum Board* Nom 5/8 in. thick gypsum wallboard, as specified in the individual Wall and Partition Design. Max diam of opening is 7 in.
2. Through-Penetrants One nonmetallic pipe, conduit or tubing to be installed within the firestop system. The annular space between pipe and periphery of opening shall be min 0 in. (point contact) to max 1/2 in. Pipe or conduit to be rigidly supported on both sides of the wall assembly. The following types and sizes of nonmetallic pipes may be used:
   A. Polyvinyl Chloride (PVC) Pipe Nom 6 in. diam (or smaller) Schedule 40 solid-core or cellular core PVC pipe for use in closed (process or supply) or vented (drain, waste or vent) piping system.
   B. Chlorinated Polyvinyl Chloride (CPVC) Pipe Nom 6 in. diam (or smaller) SDR17 CPVC pipe for use in closed (process or supply) or vented (drain, waste or vent) piping systems.
   C. Acrylonitrile Butadiene Styrene (ABS) Pipe Nom 6 in. diam (or smaller) Schedule 40 solid-core or cellular core ABS pipe for use in closed (process or supply) or vented (drain, waste or vent) piping systems.
   D. Flame Retardant Polypropylene (FRPP) Pipe Nom 6 in. diam (or smaller) Schedule 40 FRPP pipe for use in closed (process or supply) or vented (drain, waste or vent) piping system.
   E. Polyvinylidene Fluoride (PVDF) Pipe Nom 4 in. diam (or smaller) PVDF pipe for use in closed (process or supply) or vented (drain, waste or vent) piping system.
3. Firestop Device* –– Firestop Collar Firestop collar shall be installed in accordance with the accompanying installation instructions. Collar to be installed and latched around the pipe and secured to both sides of the wall using the anchor hooks provided with the collar. (Minimum 2 anchor hooks for 1-1/2 and 2 in. diam pipes, 3 anchor hooks for 3 and 4 in. diam pipes, and 6 anchor hooks for 6 in. diam pipes). The anchor hooks are to be secured to the surface of wall with 3/16 2-1/2 in. long toggle bolts along with washers.

HILTI CONSTRUCTION CHEMICALS, DIV OF
HILTI INC –– CP 643 50/1.5", CP 643 63/2", CP 643 90/3", CP 643 110/4" or CP 642 160/6" Firestop Collar

*Bearing the UL Classification Mark

PLASTIC PIPE THROUGH CONCRETE FLOOR/WALL OR BLOCK

CAJ 2110

F RATING – 3-HR.
T RATING – 0-HR.

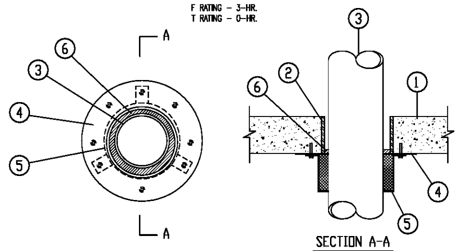

1. Floor or Wall Assembly – Min 4-1/2 in. thick reinforced lightweight or normal weight (100-150 pcf) concrete. Wall may also be constructed of any UL Classified Concrete Blocks*. Max diam of opening is 8 in. See Concrete Blocks (CAZT) category in the Fire Resistance Directory for names of manufacturers.
2. Steel Sleeve – Nom 8 in. diam (or smaller) Schedule 40 (or thinner) steel pipe cast or grouted into floor or wall assembly, flush with floor or wall surfaces.
3. Through Penetrants – One nonmetallic pipe to be installed either concentrically or eccentrically within the firestop system. The annular space between pipe and sleeve(Item 3) shall be min 1/4 in. to max 1-1/4 in. Pipe to be rigidly supported on both sides of floor or wall assembly. The following types and sizes of nonmetallic pipes may be used:
   A. Polyvinyl Chloride (PVC) Pipe Nom. 6 in. diam (or smaller) Schedule 40 solid-core or cellular core PVC pipe for use in closed (process or supply) or vented (drain, waste or vent) piping system.
   B. Chlorinated Polyvinyl Chloride(CPVC) Pipe Nom 6 in. diam (or smaller) SDR17 CPVC pipe for use in closed (process or supply) or vented (drain, waste or vent) piping systems.
   C. Acrylonitrile Butadiene Styrene (ABS) Pipe Nom 6 in. diam (or smaller) Schedule 40 solid-core or cellular core ABS pipe for use in closed (process or supply) or vented (drain, waste or vent) piping systems.
   D. Flame Retardant Polypropylene (FRPP) Pipe Nom 6 in. diam (or smaller) Schedule 40 FRPP pipe for use in closed (process or supply) or vented (drain, waste or vent) piping systems.
4. Metal Cover Plate – Min 18 ga. steel with max 1/4 in. larger than O.D. of pipe. Min O.D. of cover plate to be 4 in. larger than O.D. of pipe. Installed between underside of floor or both sides of wall between collar and floor or wall surfaces.
5. Firestop Device* – Firestop Collar – Firestop collar shall be installed in accordance with the accompanying installation instructions. Collar to be installed and latched around the pipe and secured to underside of floor or both sides of wall floor using the anchor hooks provided with the collar. (Minimum 2 anchor hooks for 1-1/2 and 2 in. diam pipes, 3 anchor hooks for 3 and 4 in. diam pipes, and 6 anchor hooks for 6 in. diam pipes). The anchor hooks are to be secured with 1/4 in. diam by min 1-1/2 in. long steel expansion bolts, or equivalent, in conjunction with steel nuts and min 3/4 in. diam steel washers with one anchor bolt in each anchor hook
   HILTI CONSTRUCTION CHEMICALS, DIV OF
   HILTI INC – CP 643 50/1.5", CP 643 63/2". CP 643 90/3", CP 643 110/4" or CP 642 160/6" Firestop Collar
6. Fill, Void or Cavity Material* – Sealant – Min 1/2 in. thickness of fill material applied within the annulus, flush with bottom surface of floor or both surfaces of wall assembly. Additionally, nom 1/4 in. beads of fill material applied between concrete and cover plate and between cover plate and firestop device.
   HILTI CONSTRUCTION CHEMICALS, DIV OF
   HILTI INC – CP601S, CP606 or FS-One Sealant

*Bearing the UL Classification Marking

METAL PIPE THROUGH 1 OR 2 HOUR GYPSUM WALL ASSEMBLY

WL 1058

System No. W-L-1058
F Rating – 2 Hr
T Ratings – 0 and 1/4 Hr (See Item 2)

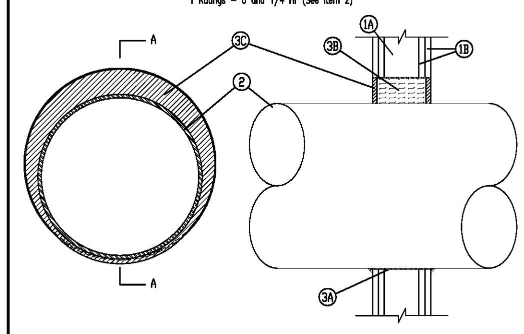

1. Wall Assembly – The fire-rated gypsum wallboard/stud wall assembly shall be constructed of the materials and in the manner specified in the individual U300 or U400 Series Wall and Partition Designs in the UL Fire Resistance Directory and shall include the following construction features:
   A. Studs – Wall framing may consist of either wood studs or steel channel studs. Wood studs to consist of nom 2 by 4 in. lumber spaced 16 in. OC. Steel studs to be min 2-1/2 in. wide and spaced max 24 in. OC.
   B. Wallboard, Gypsum* – Two layers of nom 5/8 in. thick gypsum wallboard, as specified in the individual Wall and Partition Design. Max diam of opening is 14-1/2 in. for wood stud walls and 20 in. for steel stud walls. Diam of circular through opening to be min 3/8 in. to max 2-3/4 in. larger than diam of through penetrants (Item 2).
2. Through-Penetrants – One metallic pipe or tubing to be installed either concentrically or eccentrically within the firestop system. Pipe or tubing to be rigidly supported on both sides of wall assembly. The following types and sizes of metallic pipes or tubing may be used:
   A. Steel Pipe – 17-1/4 in. diam (or smaller) by 0.125 (or heavier) steel pipe. The annular space shall be min 0 to max 2-3/4 in. is 1/4 hr when steel pipe is used.
   B. Copper Tubing – Nom 4 in. diam (or smaller) Type L (or heavier) copper tubing. The annular space shall be min 0 to max 3 in. rating is 0 hr when copper tubing is used.
   C. Copper Pipe – Nom 4 in. diam (or smaller) regular (or heavier) copper pipe. The annular space shall be min. 0 to max 3 in. 0 hr when copper pipe is used.
3. Firestop System – The firestop system shall consist of the following:
   A. Steel Wire Mesh – No. 8 steel wire mesh having a min 1 in. lap along the longitudinal seam. Length of steel wire mesh to be 4-3/4 in., centered and formed to fit periphery of through opening.
   B. Packing Material – Min 4-1/2 in. thickness of flexible urethane sheet firmly packed into opening as a permanent form. Packing material to be recessed from both surfaces of wall as required to accommodate the required thickness of fill material.
   C. Fill, Void or Cavity Material* – Sealant – Min 1/4 in. thickness of fill material applied within the annulus, flush with both surfaces of wall. At the point contact location between pipe and wall, a min 1/2 in. diam bead of caulk shall be applied at the wall/pipe interface on both surfaces of wall assembly.
      HILTI CONSTRUCTION CHEMICALS, DIV OF
      HILTI, Inc. – FS-ONE Sealant

*Bearing the UL Classification Marking

INSULATED METAL PIPE THROUGH 1 OR 2 HOUR GYPSUM WALL ASSEMBLY

WL 5096

System No. W-L-5096
F Ratings – 1 and 2 Hr (See Item 1, 3 and 5)
T Ratings – 1/2 and 1 Hr (See Items 1, 3 and 5)

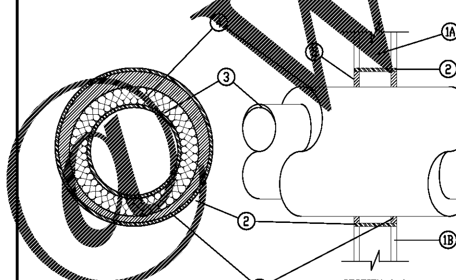

1. Wall Assembly The 1 or 2 hr fire rated wallboard/stud wall assembly shall be constructed of the materials and in the manner specified in the individual U300 or U400 Series Wall and Partition Designs in the UL Fire Resistance Directory and shall include the following construction features:
   A. Studs Wall framing shall consist of either wood studs or steel channel studs. Wood studs to consist of nom 2 by 4 in. lumber spaced 16 in. OC. Steel studs to be min 2-1/2 in. wide and spaced max 24 in. OC.
   B. Gypsum Board* Nom 5/8 in. thick, 4 ft wide with square or tapered edges. The gypsum board type, thickness, number of layers, fastener type and sheet orientation shall be as specified in the individual U300 or U400 Series Design in the Fire Resistance Directory. Max diam of openings is 14-1/2 in. for wood stud walls. Max diam of opening is 18 in. for steel studs walls. The hourly F and T Ratings of the firestop system is equal to the hourly fire rating of the wall assembly in which it is installed.
2. Steel Sleeve Max 18 in. diam Schedule 40 (or heavier) steel pipe sleeve inserted in nom 18 in. diam circular opening core drilled through wall. Length of steel sleeve to be equal to thickness of wall.
3. Through Penetrant One metallic pipe or tubing installed concentrically or eccentrically within the firestop system. Pipe or tube to be rigidly supported on both sides of wall assembly. The following types and sizes of metallic pipes or tube may be used:
   A. Steel Pipe Nom 10 in. diam (or smaller) Schedule 40 (or heavier) steel pipe. When steel pipe is used, T Rating is 1/2 and 1 hr when installed in 1 and 2 hr rated walls, respectively.
   B. Copper Tube Nom 4 in. diam (or smaller) Type L (or heavier) copper tube. When copper tube is used, T Rating is 1/2 hr.
   C. Copper Pipe Nom 4 in. diam (or smaller) Regular (or heavier) copper pipe. When copper pipe is used, T Rating is 1/2 hr.
4. Pipe Covering* Nom 2 in. thick hollow cylindrical heavy density (min 3.5 pcf) glass fiber units, jacketed on the outside with an all service jacket. Longitudinal joints sealed with metal fasteners or factory-applied SSL tape. Transverse joints secured with metal fasteners or with butt tape supplied with the product.

See Pipe and Equipment Covering-Materials (BRGU) category in the Building Materials Directory for names of manufacturers. Any pipe covering material meeting the above specifications and bearing the UL Classification Marking with a Flame Spread Index of 25 or less and a Smoke Developed Index of 50 or less may be used.
The annular space of the firestop system is dependent on the type and size of the through penetrant as shown in the table below:

Through Penetrant Type Max	Diam In.	Annular Space Min In.	Max In.
A	10	1/2	1-1/2
B or C	4	3/8	1-1/2

5. Fill, Void or Cavity Material*-Sealant Min 5/8 in. or 1-1/4 in. thickness of fill material applied within annulus, flush with both surfaces of wall assembly for 1 or 2 hr rated walls, respectively.

HILTI CONSTRUCTION CHEMICALS, DIV OF
HILTI INC – FS-ONE Sealant
*Bearing the UL Classification Mark

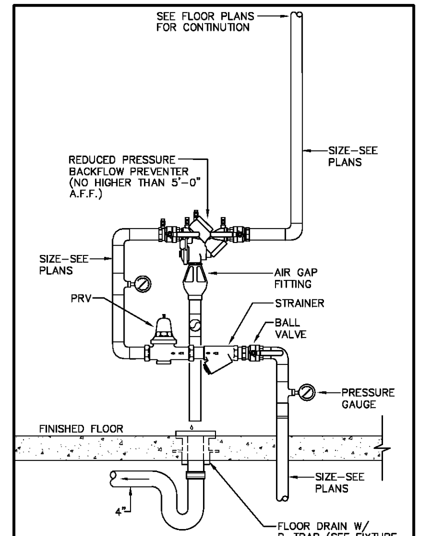

TYPICAL WATER SERVICE ENTRANCE DETAIL

NTS

WATER HEATER SCHEDULE

HEATER NO.	GAL. CAP.	GAS B.TU. INPUT	VOLTAGE/ KW/PHASE	RECOVERY @ 100 ˚ RISE	MFR. & MODEL NO.	LOCATION	EXPANSION TANK
EWH1	28	---	208/4.5/1	18.45	LOCHINVAR MODEL JEJ030KD	MEN'S RESTROOM ABOVE CEILING	B & G MODEL PT-5

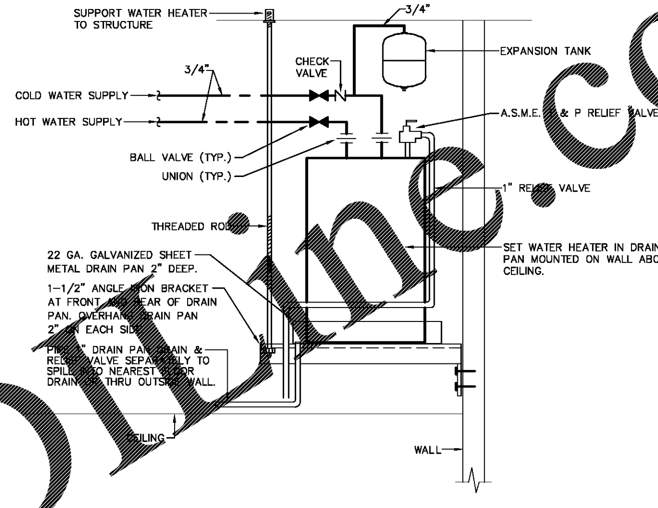

ELECTRIC WATER HEATER EWH1 PIPING DIAGRAM

NOT TO SCALE

PLUMBING LEGEND

SYMBOL	DESCRIPTION
—— ——SA—— ——	SANITARY SEWER BELOW FLOOR AND/OR GRADE
—— ——ESA—— ——	EXISTING SANITARY SEWER PIPING
—— ——GI—— ——	GREASE INTERCEPTOR INLET LINE
—— ——EGI—— ——	EXISTING GREASE INTERCEPTOR LINE
----------------------	SANITARY VENT PIPING
——— — ———	COLD WATER (C.W.)
———— EW ————	EXISTING WATER LINE
——— — — ———	HOT WATER (H.W)
————EF————	EXISTING FIRE LINE
—×— —×—×—×— —×—	EXISTING PIPING TO BE REMOVED
———— G ————	NATURAL GAS PIPING
————HPG————	CITY HIGH PRESSURE GAS MAIN
————EG————	EXISTING GAS PIPING
————A————	COMPRESSED AIR PIPING
	GAS COCK
	SHUT-OFF VALVE
	SHUT-OFF VALVE ON RISE OR DROP
T-'A'	TENANT 'A' SPACE
T-'B'	TENANT 'B' SPACE
T-'C'	TENANT 'C' SPACE
T-'D'	TENANT 'D' SPACE
T-'E'	TENANT 'E' SPACE
T-'F'	TENANT 'F' SPACE
T-'G'	TENANT 'G' SPACE
T-'H'	TENANT 'H' SPACE
T-'I'	TENANT 'I' SPACE
CO	CLEANOUT
P.D.I. "A"	WATER HAMMER ARRESTOR (RATING NOTED)
V.T.R.	VENT THRU ROOF
SAN.	SANITARY SEWER
R.P.B.P.	REDUCED PRESSURE BACKFLOW PREVENTER
	POINT AT WHICH NEW CONNECTS TO EXISTING

BARRY BYRD ARCHITECTURE

P.O. Box 5482
Knoxville, TN 37928
(865) 687-6500

Seal:

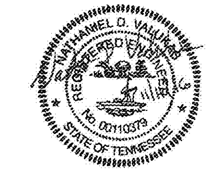

ESG
ENGINEERING SERVICES GROUP, INC.
CONSULTING ENGINEERS
900 EAST HILL AVE. SUITE 350
KNOXVILLE, TENNESSEE 37915
(865) 522-0393
PROJECT NO. 15688

THIS DRAWING IS THE PROPERTY OF BARRY BYRD ARCHITECTURE. ANY USE OR REPRODUCTION IN PART OR IN WHOLE IS PROHIBITED WITHOUT THE EXPRESSED WRITTEN CONSENT OF BARRY BYRD ARCHITECTURE.

Project Name:
GERMANTOWN2

Drawn By:
RAS

Revisions:

No.	DATE	DESCRIPTION

Project Title:

RETAIL SPACE

Poplar Avenue &
Exeter Road

Location:
Germantown, TN

Sheet Contents:
Plumbing Details and Schedules

Date:
November 11, 2016

Sheet Number:
P-211

Order Plans @ www.LDLine.com