Plotted By: Fitzgerald, James Sheet Set: 1560 PALM BEACH LAKES Layout: C3.10 EROSION AND SEDIMENTATION CONTROL PLAN August 03, 2017 04:51:46pm K:\BCD_Civil\140336000 - 1560 Palm Beach Lakes\CADD\PlanSheets\C3.00 EROSION AND SEDIMENTATION CONTROL PLAN.dwg
This document, together with the concepts and designs presented herein, as an instrument of service, is intended only for the specific purpose and client for which it was prepared. Reuse of and improper reliance on this document without written authorization and adaptation by Kimley-Horn and Associates, Inc. shall be without liability to Kimley-Horn and Associates, Inc.

PHASING NOTES

1. CONTRACTOR MAY PHASE EROSION AND SEDIMENTATION CONTROL MEASURES IN ACCORDANCE WITH SITE CONSTRUCTION PHASING.
2. CONTRACTOR SHALL ENSURE THAT THE CONSTRUCTION AREA IS SEPARATED FROM THE AREA NOT UNDER CONSTRUCTION WITH A TEMPORARY CHAIN LINK FENCE AND ENSURE THE SAFETY OF THE PUBLIC.

SEQUENCE OF CONSTRUCTION

UPON IMPLEMENTATION AND INSTALLATION OF THE FOLLOWING AREAS: TRAILER, PARKING, LAYDOWN, PORTA-POTTY, WHEEL WASH, CONCRETE WASHOUT, FUEL AND MATERIAL STORAGE CONTAINERS, SOLID WASTE CONTAINERS, ETC., IMMEDIATELY DENOTE THEM ON THE SITE MAPS AND NOTE ANY CHANGES IN LOCATION AS THEY OCCUR THROUGHOUT THE CONSTRUCTION PROCESS.

PHASE 1:
1. CONSTRUCT STABILIZED CONSTRUCTION ENTRANCE AND INSTALL SILT FENCE, TURBIDITY BARRIER AND INLET PROTECTION.
2. PERFORM CLEARING AND GRUBBING AND DEMOLITION.

PHASE 2:
1. PERFORM MASS GRADING. ROUGH GRADE TO ESTABLISH PROPOSED DRAINAGE PATTERNS.
2. CONSTRUCT PROPOSED DRAINAGE INFRASTRUCTURE.
3. TEMPORARILY SEED WITH PURE LIVE SEED, THROUGHOUT CONSTRUCTION, DISTURBED AREAS THAT WILL BE INACTIVE FOR 7 DAYS OR MORE OR AS REQUIRED BY GENERIC PERMIT.
4. CONSTRUCT PROPOSED IMPROVEMENTS.
5. COMPLETE FINAL GRADING AND FINAL STABILIZATION.
6. REMOVE TEMPORARY EROSION CONTROL MEASURES.

MAINTENANCE (ALL PHASES)

ALL MEASURES STATED ON THIS SITE MAP, AND IN THE STORM WATER POLLUTION PREVENTION PLAN, SHALL BE MAINTAINED IN FULLY FUNCTIONAL CONDITION UNTIL NO LONGER REQUIRED FOR A COMPLETED PHASE OF WORK OR FINAL STABILIZATION OF THE SITE. ALL EROSION AND SEDIMENTATION CONTROL MEASURES AND PRACTICES WHETHER TEMPORARY OR PERMANENT, SHALL BE AT ALL TIMES THE RESPONSIBILITY OF THE CONTRACTOR/PRIMARY PERMITEE. THESE MEASURES SHALL BE CHECKED BY A QUALIFIED PERSON IN ACCORDANCE WITH THE CONTRACT DOCUMENTS OR THE APPLICABLE PERMIT, WHICHEVER IS MORE STRINGENT, AND REPAIRED IN ACCORDANCE WITH THE FOLLOWING:

1. INLET PROTECTION DEVICES AND BARRIERS SHALL BE REPAIRED OR REPLACED IF THEY SHOW SIGNS OF UNDERMINING OR DETERIORATION.
2. ALL SEEDED AREAS SHALL BE CHECKED REGULARLY TO SEE THAT A GOOD STAND IS MAINTAINED. AREAS SHOULD BE FERTILIZED, WATERED, AND RESEEDED AS NEEDED.
3. SILT FENCES SHALL BE REPAIRED TO THEIR ORIGINAL CONDITIONS IF DAMAGED. SEDIMENT SHALL BE REMOVED FROM THE SILT FENCES WHEN IT REACHES ONE-HALF THE HEIGHT OF THE SILT FENCE.
4. THE CONSTRUCTION EXITS SHALL BE MAINTAINED IN A CONDITION WHICH WILL PREVENT TRACKING OR FLOW OF MUD ONTO PUBLIC RIGHTS-OF-WAY. THIS MAY REQUIRE PERIODIC TOP DRESSING OF THE CONSTRUCTION EXITS AS CONDITIONS DEMAND.
5. THE TEMPORARY PARKING AND STORAGE AREA SHALL BE KEPT IN GOOD CONDITION (SUITABLE FOR PARKING AND STORAGE). THIS MAY REQUIRE PERIODIC TOP DRESSING OF THE TEMPORARY PARKING AREA AS CONDITIONS DEMAND.

NOTES

1. CONTRACTOR TO CONSIDER POTENTIAL DEWATERING ACTIVITIES WHEN PREPARING BID DOCUMENTS FOR THIS PROJECT.
2. CONTRACTOR SHALL OBTAIN ANY NECESSARY DEWATERING PERMITS AS SITE CONDITIONS AND CONSTRUCTION ACTIVITIES REQUIRE.
3. CONTRACTOR TO USE B.M.P.'S TO ENSURE COMPLIANCE WITH NPDES AND WATER MANAGEMENT DISTRICT REGULATIONS FOR STORMWATER DISCHARGE FROM CONSTRUCTION ACTIVITIES AND DEWATERING OPERATIONS.
4. THE ESCAPE OF SEDIMENT FROM THE SITE SHALL BE PREVENTED BY THE INSTALLATION OF EROSION AND SEDIMENT CONTROL MEASURES AND PRACTICES PRIOR, OR CONCURRENT WITH LAND DISTURBING ACTIVITIES.

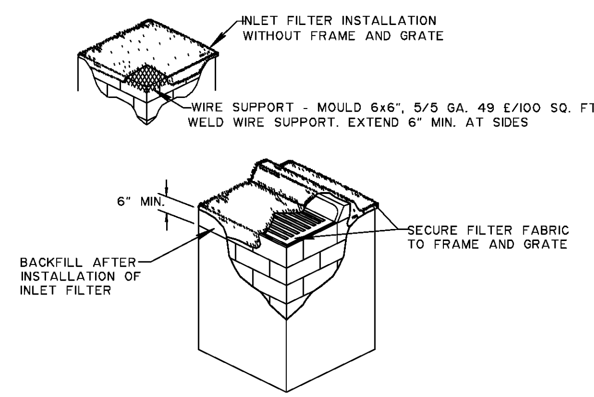

NOT TO SCALE

NOTES:

1. CONTRACTOR IS TO CLEAN INLET FILTER AFTER EVERY STORM.
2. CONTRACTOR TO REMOVE FABRIC JUST PRIOR TO PAVING
3. A SEDIMENT TRAP WILL BE EXCAVATED BEHIND THE CURB AT THE INLET. BASIN THE SHALL BE AT LEAST 12 TO 14 INCHES IN DEPTH, APPROXIMATELY 36 INCHES IN WIDTH AND APPROXIMATELY 7 TO 10 FEET IN LENGTH PARALLEL TO THE CURB.
4. STORM WATER WILL REACH THE SEDIMENT TRAP VIA CURB CUTS ADJACENT TO SIDE OF THE INLET STRUCTURE. THESE OPENINGS SHALL BE AT LEAST 12 INCHES IN LENGTH. STORM WATER MAY ALSO REACH THE BASIN VIA OVERLAND FLOW LAND AREA BEHIND THE CURB. THE CURB CUTS SHALL BE REPAIRED WHEN THE SEDIMENT TRAP IS REMOVED.

INLET FILTER DETAIL

REVISED: JUNE-2016	POLLUTION CONTROL - INLET PROTECTION INSTALLATION	STANDARD DETAIL
ISSUED: 2016	CITY OF WEST PALM BEACH	PC-3

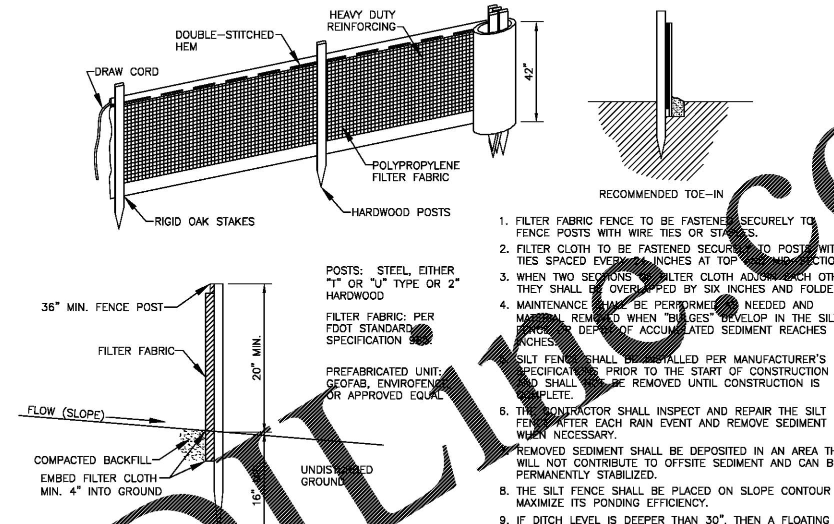

1. FILTER FABRIC FENCE TO BE FASTENED SECURELY TO FENCE POSTS WITH WIRE TIES OR STAPLES.
2. FILTER CLOTH TO BE FASTENED SECURELY TO POSTS WITH TIES SPACED EVERY 24 INCHES AT TOP AND MID-SECTION.
3. WHEN TWO SECTIONS OF FILTER CLOTH ADJOIN EACH OTHER THEY SHALL BE OVERLAPPED BY SIX INCHES AND FOLDED.
4. MAINTENANCE SHALL BE PERFORMED AS NEEDED AND MATERIAL REMOVED WHEN "BULGES" DEVELOP IN THE SILT FENCE, OR DEPTH OF ACCUMULATED SEDIMENT REACHES 6 INCHES.
5. SILT FENCE SHALL BE INSTALLED PER MANUFACTURER'S SPECIFICATIONS PRIOR TO THE START OF CONSTRUCTION AND SHALL NOT BE REMOVED UNTIL CONSTRUCTION IS COMPLETE.
6. THE CONTRACTOR SHALL INSPECT AND REPAIR THE SILT FENCE AFTER EACH RAIN EVENT AND REMOVE SEDIMENT WHEN NECESSARY.
7. REMOVED SEDIMENT SHALL BE DEPOSITED IN AN AREA THAT WILL NOT CONTRIBUTE TO OFFSITE SEDIMENT AND CAN BE PERMANENTLY STABILIZED.
8. THE SILT FENCE SHALL BE PLACED ON SLOPE CONTOUR TO MAXIMIZE ITS PONDING EFFICIENCY.
9. IF DITCH LEVEL IS DEEPER THAN 30", THEN A FLOATING SILT SCREEN SHALL BE USED.
10. REFER TO THE FLORIDA STORMWATER EROSION AND SEDIMENTATION CONTROL INSPECTOR'S MANUAL FOR ADDITIONAL INFORMATION.

REVISED: JUNE-2016	POLLUTION CONTROL - TURBIDITY BARRIER SILT FENCE	STANDARD DETAIL
ISSUED: 2016	CITY OF WEST PALM BEACH	PC-2

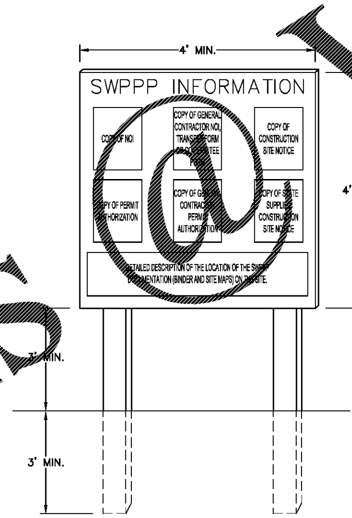

NOTES:
1. "SWPPP INFORMATION" MUST BE DISPLAYED PROMINENTLY ACROSS THE TOP OF THE SIGN, AS SHOWN IN THE DETAIL.
2. SIGN TO BE CONSTRUCTED OF A RIGID MATERIAL, SUCH AS PLYWOOD OR OUTDOOR SIGN BOARD. SIGN MUST BE CONSTRUCTED IN A MANNER TO PROTECT DOCUMENTS FROM DAMAGE DUE TO WEATHER (WIND, SUN, MOISTURE, ETC.).
3. THE SWPPP INFORMATION SIGN MUST BE LOCATED NEAR THE ENTRANCE/EXIT OF THE SITE, SUCH THAT IT IS ACCESSIBLE/VIEWABLE BY THE GENERAL PUBLIC, BUT NOT OBSTRUCTING VIEWS AS TO CAUSE A SAFETY HAZARD.
4. ALL POSTED DOCUMENTS MUST BE MAINTAINED IN A CLEARLY READABLE CONDITION AT ALL TIMES THROUGHOUT CONSTRUCTION AND UNTIL THE NOTICE-OF-TERMINATION (NOT) IS FILED FOR THE PERMIT.
5. CONTRACTOR SHALL POST OTHER STORM WATER AND/OR EROSION AND SEDIMENT CONTROL RELATED PERMITS ON THE SIGN AS REQUIRED BY THE LOCAL AGENCY.
6. SIGN SHALL BE LOCATED OUTSIDE OF PUBLIC RIGHT-OF-WAY AND EASEMENTS UNLESS APPROVED BY THE GOVERNING AGENCY.
7. CONTRACTOR IS RESPONSIBLE FOR ENSURING STABILITY OF THIS SWPPP INFORMATION SIGN.

SWPPP INFORMATION SIGN
NOT TO SCALE

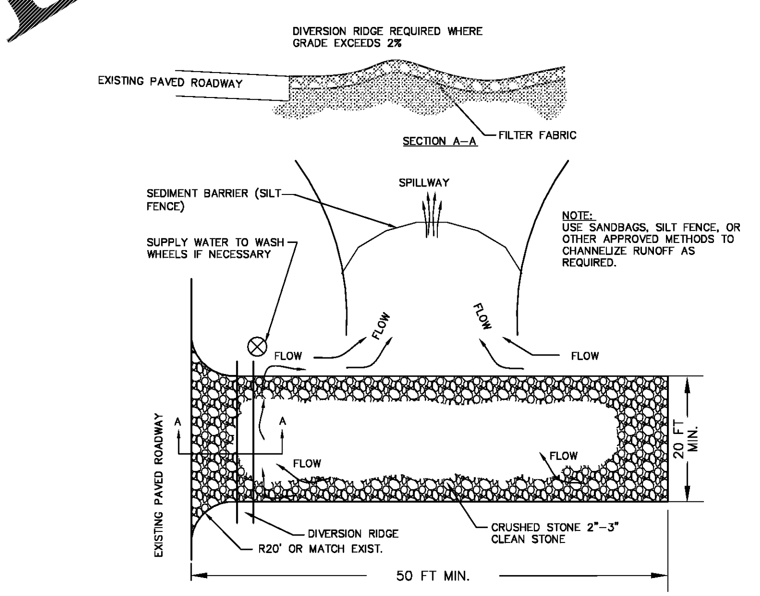

NOTES:

1. THE ENTRANCE SHALL BE MAINTAINED IN A CONDITION THAT WILL PREVENT TRACKING OR FLOWING OF SEDIMENT ONTO PUBLIC RIGHTS-OF-WAY. THIS MAY REQUIRE TOP DRESSING, REPAIR AND/OR CLEANOUT OF ANY MEASURES USED TO TRAP SEDIMENT.
2. WHEN NECESSARY, WHEELS SHALL BE CLEANED PRIOR TO ENTRANCE ONTO PUBLIC RIGHT-OF-WAY.
3. WHEN WASHING IS REQUIRED, IT SHALL BE DONE ON AN AREA STABILIZED WITH CRUSHED STONE THAT DRAINS INTO AN APPROVED SEDIMENT TRAP OR SEDIMENT BASIN.

TEMPORARY GRAVEL CONSTRUCTION ENTRANCE
NOT TO SCALE

SOIL EROSION/SEDIMENTATION CONTROL OPERATION TIME SCHEDULE

NOTE: GENERAL CONTRACTOR TO COMPLETE TABLE WITH THEIR SPECIFIC PROJECT SCHEDULE

CONSTRUCTION SEQUENCE	JAN	FEB	MAR	APR	MAY	JUN	JUL	AUG	SEP	OCT	NOV	DEC	JAN	FEB	MAR	APR	MAY	JUN	JUL	AUG	SEP	OCT	NOV	DEC
TEMPORARY CONSTRUCTION ENTRANCE																								
TEMPORARY CONTROL MEASURES																								
STRIP & STOCKPILE TOPSOIL																								
ROUGH GRADE																								
STORM FACILITIES																								
SITE CONSTRUCTION																								
FINISH GRADING																								
LANDSCAPING/SEED/FINAL STABILIZATION																								

No.	REVISIONS	DATE	BY

Kimley»Horn

© 2017 KIMLEY-HORN AND ASSOCIATES, INC.
1615 S CONGRESS AVE, SUITE 201, DELRAY BEACH, FL 33445
PHONE: 561-330-2345 FAX: 561-863-8175
WWW.KIMLEY-HORN.COM CA 00000696

LICENSED PROFESSIONAL
MICHAEL D. SPRUCE, P.E.
FL LICENSE NUMBER 52776
DATE: ----

KHA PROJECT 140336000
DATE AUGUST 2017
SCALE AS SHOWN
DESIGNED BY MDM
DRAWN BY JRB
CHECKED BY MDS

DEMOLITION AND EROSION CONTROL DETAILS AND NOTES

1560 PALM BEACH LAKES

PREPARED FOR
TRICOR INTERNATIONAL CORP.

WEST PALM BEACH FL

SHEET NUMBER
C3.10

Order Plans @ www.LDILine.com