DOOR SCHEDULE

NO.	EL.	DOOR W	DOOR H	DOOR T	DOOR MATERIAL	FRAME TYP.	FRAME MAT'L	DETAILS HEAD	DETAILS JAMB	DETAILS SILL	FIRE RATED	REMARKS
100	C	2-3'-0"	7'-0"	1-3/4"	ALUM.	-	ALUM.	-	-	4	-	
101	F	3'-0"	7'-0"	1-3/4"	H. M.	1	H. M.	5	5	-	-	
102	F	3'-0"	7'-0"	1-3/4"	H. M.	1	H. M.	5	5	-	-	
103	A	3'-0"	7'-0"	1-3/4"	H. M.	1	H. M.	5	5	-	-	
104	F	3'-0"	7'-0"	1-3/4"	H. M.	1	H. M.	1	1	3	3/4 c	SELF CLOSING DEVICE, PANIC BAR
105	A	3'-0"	7'-0"	1-3/4"	H. M.	1	H. M.	1	1	3	3/4 c	SELF CLOSING DEVICE
106	B	2-3'-0"	7'-0"	1-3/4"	H. M.	2	H. M.	1	1	3	3/4 c	SELF CLOSING DEVICE
107	B	2-3'-0"	7'-0"	1-3/4"	H. M.	2	H. M.	1	1	3	3/4 c	SELF CLOSING DEVICE
108	B	2-3'-0"	7'-0"	1-3/4"	H. M.	2	H. M.	1	1	3	-	SELF CLOSING DEVICE
NOT USED												
110	A	2'-6"	7'-0"	1-3/4"	H. M.	1	H. M.	5	5	-	-	SELF CLOSING DEVICE
111	A	2'-6"	7'-0"	1-3/4"	H.M.	1	H. M.	5	5	-	-	SELF CLOSING DEVICE
112	A	2'-6"	7'-0"	1-3/4"	H.M.	1	H. M.	5	5	-	-	SELF CLOSING DEVICE
113	A	2'-6"	7'-0"	1-3/4"	H.M.	1	H. M.	5	5	-	-	SELF CLOSING DEVICE
114	A	2'-6"	7'-0"	1-3/4"	H.M.	1	H. M.	5	5	-	-	SELF CLOSING DEVICE
115	F	3'-0"	7'-0"	1-3/4"	H.M.	1	H. M.	1	-	3	-	SELF CLOSING DEVICE
116	G	2-3'-0"	7'-0"	1-3/4"	H. M.	2	H. M.	1	1	3	3/4 c	SELF CLOSING DEVICE, PANIC BAR
117	A	3'-0"	7'-0"	1-3/4"	WD. SOLID CORE	1	H. M.	5	5	-	-	SELF CLOSING DEVICE
118	A	3'-0"	7'-0"	1-3/4"	WD. SOLID CORE	1	H. M.	5	5	-		
119	A	3'-0"	7'-0"	1-3/4"	WD. SOLID CORE	1	H. M.	5	5	-		
120	A	3'-0"	7'-0"	1-3/4"	WD. SOLID CORE	1	H. M.	5	5	-		
121	A	3'-0"	7'-0"	1-3/4"	WD. SOLID CORE	1	H. M.	5	5	-		
122	A	3'-0"	7'-0"	1-3/4"	WD. SOLID CORE	1	H. M.	5	5	-	-	
123	A	3'-0"	7'-0"	1-3/4"	WD. SOLID CORE	1	H. M.	5	5	-	-	
124	F	3'-0"	7'-0"	1-3/4"	H. M.	1	H. M.	1	1	3	-	
125	B	2-3'-0"	7'-0"	1-3/4"	H. M.	2	H. M.	1	1	3		
126	-	3'-0"	7'-0"		CURTAIN	1	WOOD	-	-	-		
127	-	3'-0"	7'-0"		CURTAIN	1	WOOD	-	-	-		
128	-	3'-0"	7'-0"		CURTAIN	1	WOOD	-	-	-		
129	-	3'-0"	7'-0"		CURTAIN	1	WOOD	-	-	-		
130	-	3'-0"	7'-0"		CURTAIN	1	WOOD	-	-	-		
131	-	3'-0"	7'-0"		CURTAIN	1	WOOD	-	-	-		
132	NOT USED											NOT USED
133	E	14'-0"	16'-0"	-	O/H SERVICE	-	STL.	-	-	-		ELECTRIC MOTOR OPERATED W/ PULL CHAIN MANUAL
134	E	14'-0"	16'-0"	-	O/H SERVICE	-	STL.	-	-	-		ELECTRIC MOTOR OPERATED W/ PULL CHAIN MANUAL
135	E	14'-0"	16'-0"		O/H SERVICE	-	STL.	-	-	-		ELECTRIC MOTOR OPERATED W/ PULL CHAIN MANUAL
136	E	14'-0"	16'-0"		O/H SERVICE	-	STL.	-	-	-		ELECTRIC MOTOR OPERATED W/ PULL CHAIN MANUAL
137	E	14'-0"	16'-0"		O/H SERVICE	-	STL.	-	-	-		ELECTRIC MOTOR OPERATED W/ PULL CHAIN MANUAL
138	E	14'-0"	16'-0"		O/H SERVICE	-	STL.	-	-	-		ELECTRIC MOTOR OPERATED W/ PULL CHAIN MANUAL
139	B	2-3'-0"	7'-0"	1-3/4"	H. M.	2	H. M.	1	1	3		
140	B	2-3'-0"	7'-0"	1-3/4"	H. M.	2	H. M.	1	1	3		
141	B	2-3'-0"	7'-0"	1-3/4"	WD. SOLID CORE	2	H. M.	5	5	-		
142	F	3'-0"	7'-0"	1-3/4"	H. M.	1	H. M.	1	1	3	-	
143	A	3'-0"	7'-0"	1-3/4"	WD. SOLID CORE	1	H. M.	5	5	-	-	
144	A	3'-0"	7'-0"	1-3/4"	WD. SOLID CORE	1	H. M.	5	5	-	-	
145	-	3'-0"	7'-0"		CURTAIN	1	WOOD	-	-	-		
146	-	3'-0"	7'-0"		CURTAIN	1	WOOD	-	-	-		

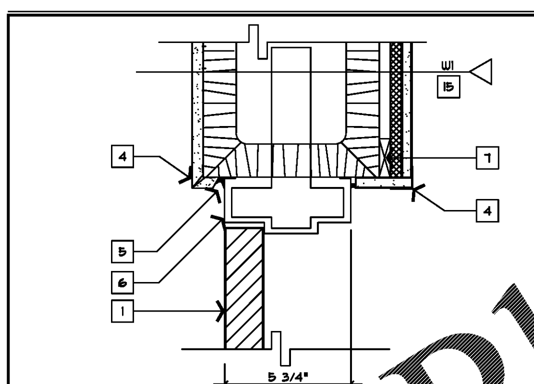

1 JAMB DETAIL (HEAD SIMILAR)
SCALE: 3" = 1'-0"

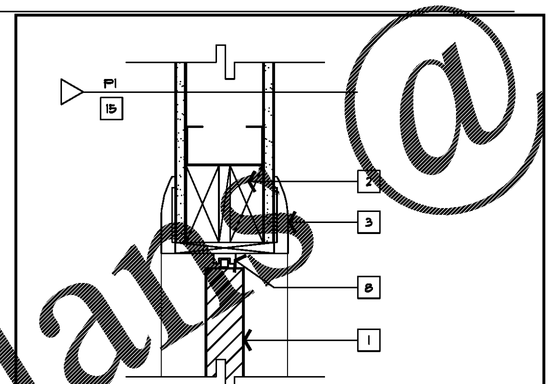

2 HEAD DETAIL
SCALE: 3" = 1'-0"

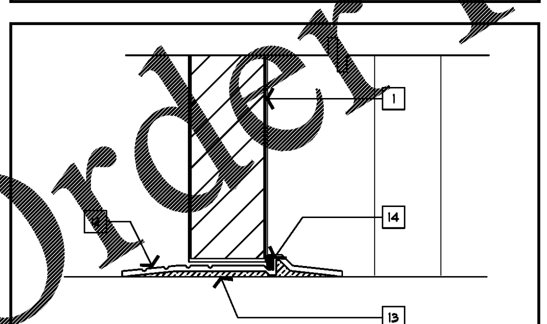

3 THRESHOLD DETAIL
SCALE: 6" = 1'-0"

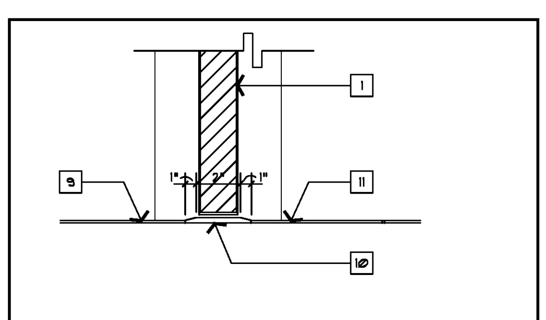

4 THRESHOLD DETAIL
SCALE: 3" = 1'-0"

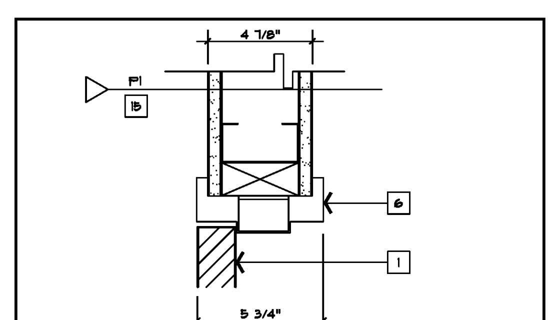

5 HEAD DETAIL (JAMB SIMILAR)
SCALE: 3" = 1'-0"

FINISH SCHEDULE

NO.	ROOM NAME	FLOOR	BASE	WALLS N	WALLS E	WALLS S	WALLS W	CLG.	CLG. HT.	REMARKS
100	ACTIVITY AREA	F1	B1	W1	W1	W1	W1	C1	9'-0"	
101	FOOD CLOSETS	F5	B1	W1	W1	W1	W1	C2	9'-0"	
102	KITCHEN	F5	B3	W3	W3	W3	W3	C1	9'-0"	
103	OFFICE	F1	B1	W1	W1	W1	W1	C1	9'-0"	
104	NITE ROOM	F1	B1	W1	W1	W1	W1	C1	9'-0"	
105	A. D. A. RESTROOM	F3	B2	W3	W3	W3	W3	C2	9'-0"	
106	BUNKER	F4	B1	W3	W3	W3	W3	C2	9'-0"	
107	DE-CON	F3	B2	W2	W2	W2	W2	C2	9'-0"	
108	NOT USED									NOT USED
109	ELEC. / MECH. ROOM	F4	B1	W3	W3	W3	W3	C2	9'-6"	2 LAYERS ⅝" G.B. , COORDINATE W/ MECH.
110	GENERATOR ROOM	F4	B1	W3	W3	W3	W3	C2	9'-0"	
111	JANITOR CLOSET	F4	B1	W3	W3	W3	W3	C2	9'-0"	
112	COVERED PATIO	F4	B1	W1	W1	W1	W1	-	10'-0"	CEMENT PLASTER CEILING
113	APPARATUS BAY	F4	B1	W3	W3	W3	W3	C2	17'-4"	
114	CHIEF'S QUARTERS	F1	B1	W1	W1	W1	W1	C1	9'-0"	
115	CAPTAIN'S QUARTERS	F1	B1	W1	W1	W1	W1	C1	9'-0"	
116	BATH	F3	B2	W3	W3	W3	W3	C2	9'-0"	CERAMIC TILE FULL HGT. IN SHOWERS
117	MALE RR #1	F3	B2	W3	W3	W3	W3	C2	9'-0"	CERAMIC TILE FULL HGT. IN SHOWERS
118	FEMALE BATH	F3	B2	W3	W3	W3	W3	C2	9'-0"	CERAMIC TILE FULL HGT. IN SHOWERS
119	JANITOR	F4	B1	W1	W1	W1	W1	C2	9'-0"	
120	CREW QUARTERS (1-8)	F1	B1	W1	W1	W1	W1	C1	9'-0"	VINYL COMPOSITION TILE IN HALL
121	MECH.	F4	B1	W1	W1	W1	W1	C2	9'-6"	2 LAYERS ⅝" G.B. , COORDINATE W/ MECH.
122	HALL	F1	B1	W1	W1	W1	W1	C1	9'-0"	
123	MEN A. D. A. RESTROOM	F3	B2	W3	W3	W3	W3	C2	9'-0"	
124	WOMEN A. D. A. RESTROOM	F3	B2	W3	W3	W3	W3	C2	9'-0"	
125	HALL	F1	B1	W1	W1	W1	W1	C1	9'-0"	
126	MECHANICAL	F4	B1	W3	W3	W3	W3	C2	9'-0"	
127	TRAINING	F1	B1	W1	W1	W1	W1	C1	9'-0"	
128	STORAGE	F4	B1	W3	W3	W3	W3	C2	9'-6"	2 LAYERS ⅝" G.B. , COORDINATE W/ MECH.

FINISH LEGEND

W1	PAINTED	F1	VINYL COMPOSITION TILE (VCT)	C1	SUSPENDED ACOUSTICAL CEILING	B1	VINYL BASE
W2	CERAMIC TILE	F2	CARPET	C2	SUSPENDED GYPSUM CEILING	B2	CERAMIC TILE BASE
W3	EPOXY PAINT	F3	2 x 2 CERAMIC TILE	C3	CEMENT PLASTER CEILING	B3	QUARRY TILE BASE
		F4	SEALED CONCRETE				
		F5	6 x 6 QUARRY TILE				

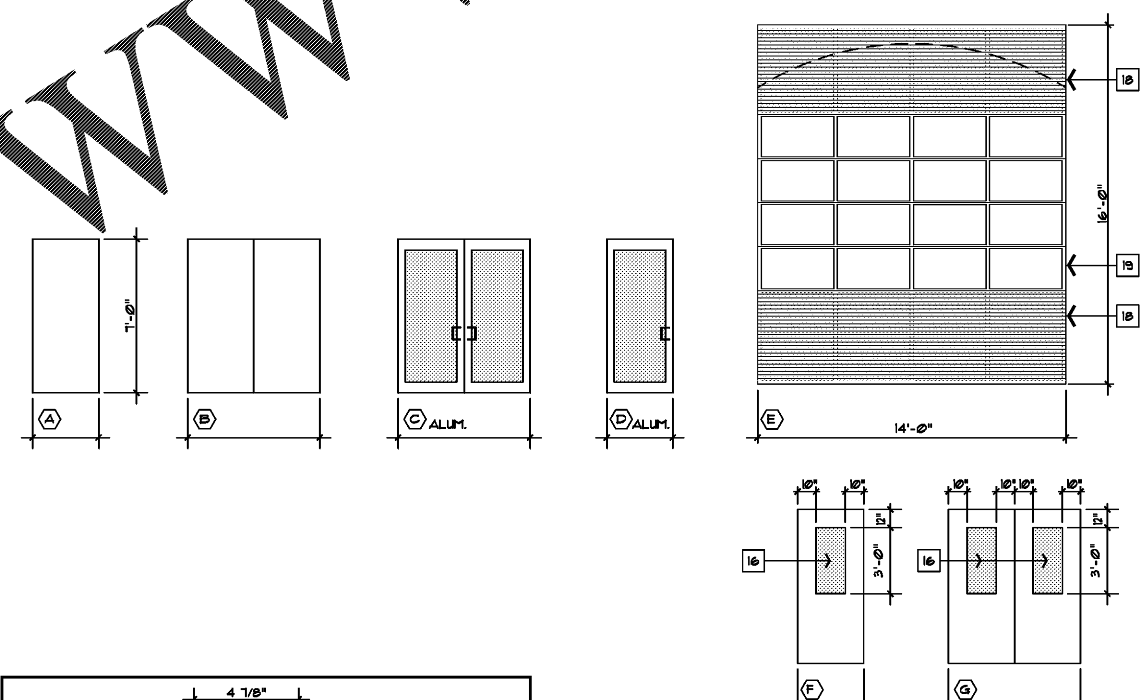

DOOR TYPES

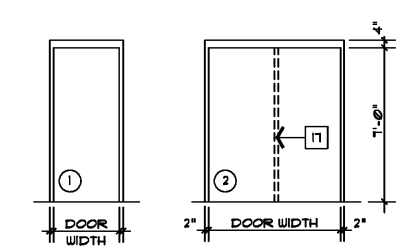

FRAME TYPES

GENERAL NOTES

KEY NOTES

1. DOOR SEE SCHEDULE.
2. 2- 2 x 4 HEADER W/PLYWOOD INFILL.
3. CASING.
4. CORNER BEAD.
5. SEALANT.
6. HOLLOW METAL FRAME PROVIDE G90 GALV. AT ALL EXTERIOR FRAMES.
7. PROVIDE 1 x 2 PT AT ALL CORNERS TYPICAL.
8. BI-FOLD TRACK.
9. FLOOR - SEE SCHEDULE.
10. MARBLE THRESHOLD.
11. CERAMIC TILE.
12. ALUMINUM SADDLE.
13. CONTINUOUS BED OF SEALANT.
14. VINYL INSERT.
15. SEE FLOOR PLAN FOR OTHER WALL TYPES FOR VARIOUS LOCATIONS.
16. 1/4" TEMPERED WIRE GLASS
17. ASTRAGAL
18. TWO PANEL HIGH DEEP RIBBED 2" THICK ROLL FORMED 20 GA. PANEL PRE-FINISHED COLOR SELECTED FROM MANUFACTURE STANDARD COLORS
19. FOUR PANEL HIGH 1/2" THICK INSULATED GLASS

SCHEDULES / DETAILS

CITY OF TAMPA
CONTRACT ADMINISTRATION DEPARTMENT
PLANNING AND DESIGN DIVISION
306 E. JACKSON STREET 4 NORTH
TAMPA, FLORIDA 33602
p: 813. 274. 8456 – f: 813. 274. 8080
url: www.tampagov.net

James E. Jackson, Jr. AIA, NOMA
City Architect
Edward D. Rice, AIA
Project Architect
Kevin L. Henika, AIA
Project Architect
Thomas A. Hester, Sr., AIA, NOMA
Project Architect

Kinsey C. Tillman
Drafting Technician
Jerry P. Sanders
Drafting Technician
Byron K. Thomas, LEED AP
Drafting Technician

MEP CONSULTANT
GRINER ENGINEERING, INC.
1628 1st. AVENUE NORTH
ST. PETERSBURG, FL 33713

STRUCTURAL CONSULTANT
BILLER REINHART
STRUCTURAL GROUP,INC.
4014 GUNN HWY. SUITE 248
TAMPA, FL 33713

CIVIL CONSULTANT
5 M CIVIL LLC
12315 WYCLIFF PLACE
TAMPA, FL 33626

LANDSCAPE CONSULTANT
DAVID CONNER & ASSOCIATES
1509 W. SWANN AVENUE,SUITE 255
TAMPA, FL 33606

FIRE STATION 23
20770 TROUT CREEK DR.
TAMPA, FL 33647

DPW FILE NUMBER

DPW NUMBER
17-C-00037

ISSUE DATE
JULY 28, 2017

DRAWN BY
KINSEY TILLMAN

REVISIONS

SEAL

SCALE: VARIES

SHEET NUMBER
A-8.1

x OF x

K:\CA\Planning & Design Division\Kinsey\~James Jackson\FIREDEPT\FIRE STATION 23 17-C-00037\FIRE STATION 23 17-C-00037 constr. docs\~fire 23 A-8.1 schedules.dwg, 8/1/2017 9:05:36 AM, Adobe PDF (temporary).pc3

Order Plans @ www.LDDILine.com