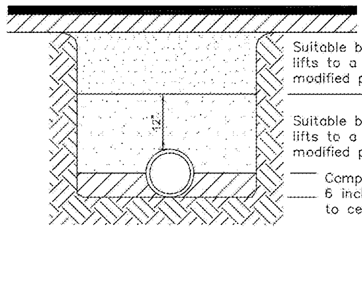

NOTES:

1. Type 2 trench is defined as a flat-bottom trench. Lightly consolidate backfill to centerline of pipe.
2. This standard shall be utilized in the absence of specific standards. The standard of the agency controlling the Right-of-Way shall govern unless otherwise directed by the Engineer.
3. Suitable backfill shall be defined as material free from cinders, ashes, refuse, clay, organic matter, boulders, rocks or stones, or other material that in the opinion of the Engineer is unsuitable.
4. Non-pervious areas shall mean any concrete or asphalt curb, sidewalk, trail, driveway, or roadway.

TAMPA WATER DEPARTMENT	APPROVED Sept. 2011	REVISED	TRENCHING, BEDDING AND BACKFILL DETAIL FOR NON-PERVIOUS (paved) AREAS	2.01

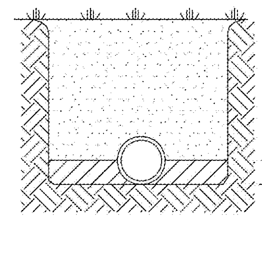

NOTES:

1. Type 2 trench is defined as a flat-bottom trench. Lightly consolidate backfill to centerline of pipe.
2. This standard shall be utilized in the absence of specific standards. The standard of the agency controlling the Right-of-Way shall govern unless otherwise directed by the Engineer.
3. Suitable backfill shall be defined as material free from cinders, ashes, refuse, clay, organic matter, boulders, rocks or stones, or other material that in the opinion of the Engineer is unsuitable.
4. Non-paved area is a pervious area. If any part of the trench is within a concrete or asphalt curb, sidewalk, driveway, or roadway, then Standard Detail 2.01 applies.

TAMPA WATER DEPARTMENT	APPROVED Sept. 2011	REVISED	TRENCHING, BEDDING AND BACKFILL DETAIL FOR PERVIOUS (non-paved) AREAS	2.02

METHOD A

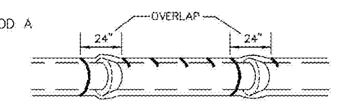

Polyethylene tube is cut into lengths approximately two feet longer than the pipe section and placed around it. After the pipe joint is assembled, the polyethylene tube is made to overlap the joint and the overlap secured in place. Since the tube is considerably larger than the barrel of pipe, it is made to fit snugly by folding over at the top and securing with tape every 24" along the pipe section.

METHOD B

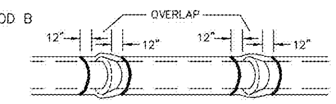

Polyethylene tube is cut one foot shorter than the length of the pipe section. After placement of the pipe, it is folded and secured snugly overall. A three foot length of polyethylene tube placed over the end of the preceeding section is then pulled in place over the joint after assembly and secured.

METHOD C

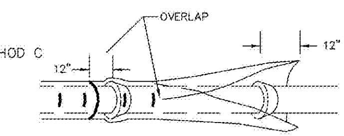

Polyethylene sheet is cut to a length two feet longer than the pipe section. The sheet is wrapped around the pipe so that it overlaps circumferentially over the top quadrant of the pipe, then secured. After joint assembly, the surplus length of polyethylene film is secured around the joint, providing an overlap of each joint. Tape at each joint and at 3' intervals in between.

NOTES: 1. Use blue polyethylene film and tape only.
2. Polyethylene film shall be a minimum of 8 mil. thickness.
3. Spiral Wrap not required with polywrap.

TAMPA WATER DEPARTMENT	APPROVED Sept. 2011	REVISED JRD 4/09 JAM 9/2011	POLYETHYLENE ENCASEMENT INSTALLATION DETAIL	2.05

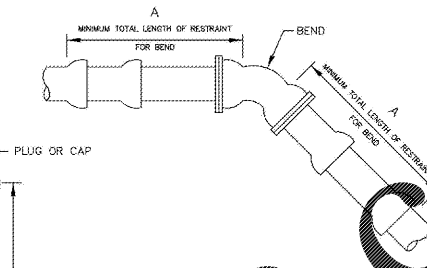

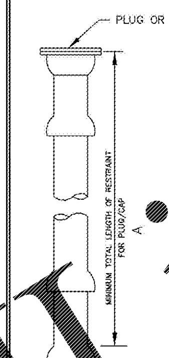

RESTRAIN "A" (LF)									
Fitting/OD	4"	6"	[illegible]	12"	16"	20"	[illegible]	30"	36"
11-1/4°	[illegible]	[illegible]	[illegible]	8	9	10	12	15	17
22-1/2°	6	9	12	[illegible]	[illegible]	21	25	30	35
45°/Offset	[illegible]	18	[illegible]	34	36	44	52	62	73
90°	[illegible]	44	58	82	87	106	125	151	176
Plug/Cap	55	78	102	143	143	174	204	245	285

A=Minimum footage of pipe to be restrained.

NOTES:
1. This table is based on:
   a) maximum test pressure of 190 psi
   b) laying condition type 2 (see Details 2.01 and 2.02)
   c) poor soil conditions
   d) using D.I.P.
   e) 3 feet of cover for 12" and smaller mains; 4 feet of cover for 16" and larger mains
   f) Horizontal bends only – Engineer to submit calculations for vertical restraints
2. For polywrapped D.I.P., increase the footage to restrain by 25%.
3. For PVC pipe, increase the footage to restrain by 20%.
4. "Restrained" pipe shall be Manufactured Restrained Joint pipe, push-on joint pipe restrained w/gasket-type "Gripper Restraints", or mechanical joint pipe restrained by Megalug (or approved equivalant).
5. Any additional fittings within the restrained section shall be restrained accordingly.

TAMPA WATER DEPARTMENT	APPROVED Sept. 2011	REVISED	RESTRAINED JOINT STANDARD FOR BENDS, PLUGS, AND CAPS	2.11

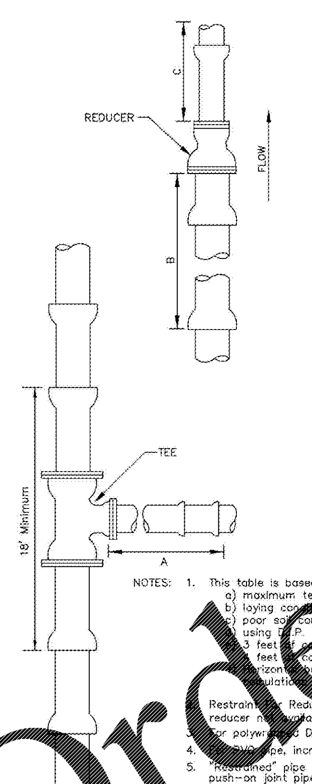

Fitting Size	Restrain (LF) Tee "A"	Reducer "B"	Unrestrained Straight Run (LF) Reducer "C"
4x4	25	*	*
6x4	11	40	59
6x6	48	*	*
8x4	A.T.	73	142
8x6	38	43	56
8x8	72	*	*
12x4	A.T.	124	364
12x6	19	104	208
12x6	57	76	115
12x12	114	*	*
16x6	A.T.	121	321
16x8	27	104	212
16x12	77	61	82
16x16	118	*	*
20x6	A.T.	156	527
20x8	14	144	369
20x12	68	109	186
20x16	111	61	77
20x20	149	*	*
24x6	A.T.	189	777
24x8	A.T.	179	560
24x12	59	150	313
24x16	104	111	172
24x20	144	61	74
24x24	179	*	*
30x6	A.T.	234	1227
30x8	A.T.	226	904
30x12	45	204	542
30x16	94	173	341
30x20	135	134	208
30x24	172	86	[illegible]
30x30	220	*	[illegible]
36x6	A.T.	[illegible]	[illegible]
36x8	A.T.	[illegible]	[illegible]
36x12	30	251	[illegible]
36x16	83	226	[illegible]
36x20	127	195	373
36x24	165	156	245
36x30	215	86	106
36x36	[illegible]	*	*

A.T.–Restraint required [illegible] Tee only.
*–not applicable

NOTES: 1. This table is based on:
a) maximum test pressure [illegible] 190 psi
b) laying [illegible] 2 [illegible] Details 2.01 and 2.02)
c) poor soil [illegible]
d) using [illegible]
e) 3 feet [illegible] cover for 1[illegible] and [illegible] mains;
[illegible] feet [illegible] cover for 1[illegible] and [illegible] mains
f) [illegible] bends only – Engineer to submit [illegible] restraints
2. Restraint [illegible] Reducers. If "C" straight run of pipe downstream of reducer [illegible], then restrain "B" upstream of reducer.
3. For polywr[illegible] D.I.P., increase the footage to restrain by 25%.
4. [illegible] pipe, increase the footage to restrain by 20%.
5. "Restrained" pipe shall be Manufactured Restrained Joint pipe, push-on joint pipe restrained w/gasket-type "Gripper Restraints", or mechanical joint pipe restrained by Megalug (or approved equivalant).
6. Any additional fittings within the restrained section shall be restrained accordingly.

TAMPA WATER DEPARTMENT	APPROVED Sept. 2011	REVISED	RESTRAINED JOINT STANDARD FOR TEES AND REDUCERS	2.12

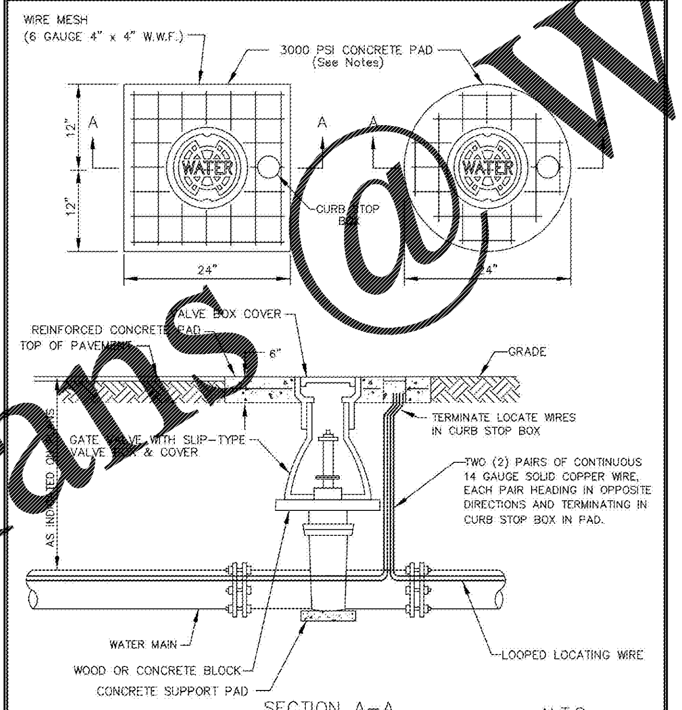

SECTION A–A

N.T.S.

Notes :

1. Circular or square concrete pad required for all valve box installations.
2. Cast iron valve boxes shall be firmly supported and centered and plumb over the operating nut of the valve. Valve box cover shall be flush with the surface of finished pavement or grade or at such other level as may be directed by the Department.
3. "Blue" Water Valve locate markers required for all valve installations.

TAMPA WATER DEPARTMENT	APPROVED Sept. 2011	REVISED	VALVE INSTALLATION W/VALVE BOX & PAD FOR PLASTIC PIPE	3.02

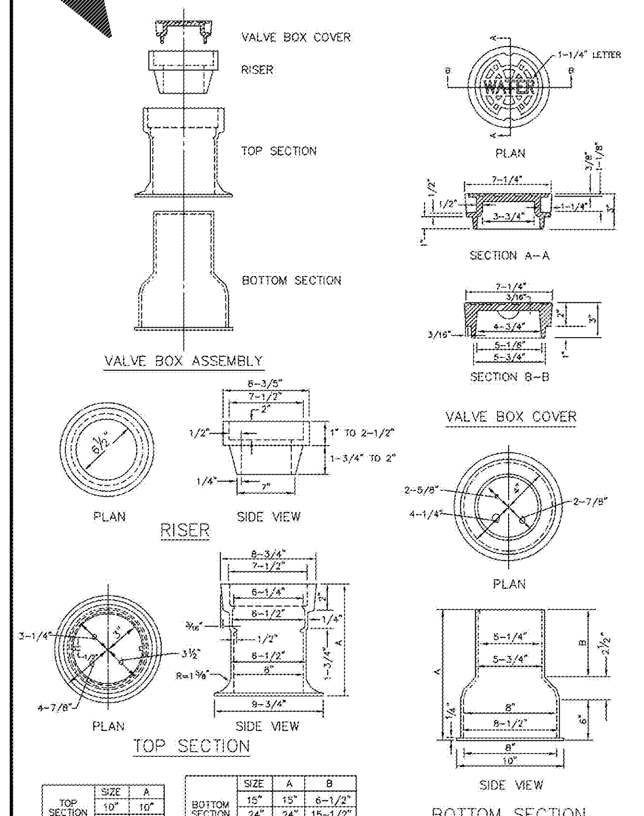

TOP SECTION	SIZE	A
	10"	10"
	16"	16"

BOTTOM SECTION	SIZE	A	B
	15"	15"	6-1/2"
	24"	24"	15-1/2"
	36"	36"	27-1/2"

TAMPA WATER DEPARTMENT	APPROVED Sept. 2011	REVISED	VALVE BOX, SLIP-TYPE	3.04

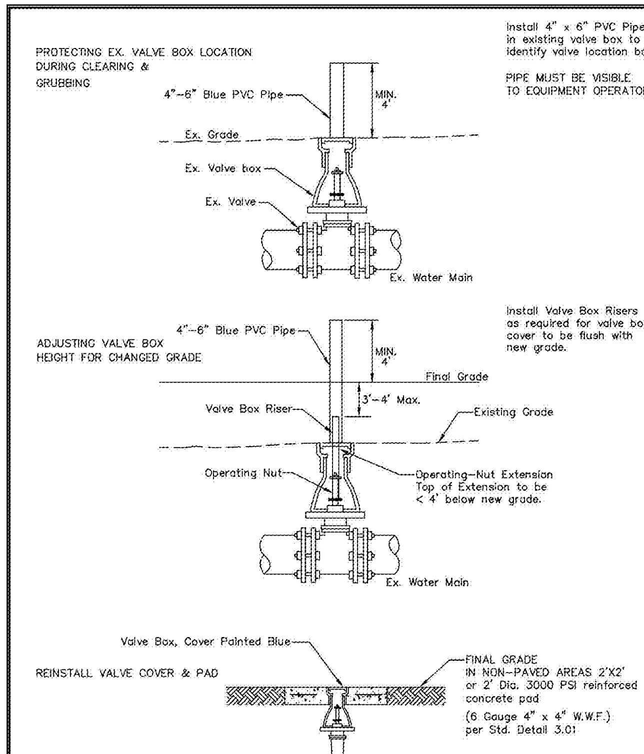

NOTES:
1. MATERIALS FOR & INSTALLATION OF VALVE BOXES & PADS SHALL CONFORM TO TAMPA WATER DEPT. STANDARDS & CONSTRUCTION DETAILS (DETAILS 3.01 & 3.03)

TAMPA WATER DEPARTMENT	APPROVED Dec. 2011	REVISED	VALVE BOX ADJUSTMENTS FOR GRADE CHANGE	3.05

CITY OF TAMPA
CONTRACT ADMINISTRATION DEPARTMENT
PLANNING AND DESIGN DIVISION
306 E. JACKSON STREET 4 NORTH
TAMPA, FLORIDA 33602
p: 813. 274. 8456 – f: 813. 274. 8080
url: www.tampagov.net

James E. Jackson, Jr. AIA, NOMA
City Architect
Edward D. Rice, AIA
Project Architect
Kevin L. Hanika, AIA
Project Architect
Thomas A. Hester, Sr., AIA, NOMA
Project Architect
Kinsey C. Tillman
Drafting Technician
Jerry P. Sanders
Drafting Technician
Byron K. Thomas, LEED AP
Drafting Technician

MEP CONSULTANT
GRINER ENGINEERING, INC.
1628 1st. AVENUE NORTH
ST. PETERSBURG, FL 33713

STRUCTURAL CONSULTANT
BILLER REINHART
STRUCTURAL GROUP, INC.
4014 GUNN HWY. SUITE 248
TAMPA, FL 33713

CIVIL CONSULTANT

LANDSCAPE CONSULTANT
DAVID CONNER & ASSOCIATES
1509 W. SWANN AVENUE
SUITE 255
TAMPA, FL 33606

FIRE STATION 23
20770 TROUT CREEK DR.
TAMPA, FL 33647

DPW FILE NUMBER

DPW NUMBER
17-C-00037

ISSUE DATE
???

DRAWN BY
JAM

REVISIONS

SEAL

Jesus A. Merly, PE FL Reg No. 58113

Elevations shown within this plan set are based on North American Vertical Datum (NAVD 1988)

WATER DETAILS

SHEET NUMBER:
CD-3

Order Plans @ WWW.LDILine.com