Packaged, Condenser and Furnace Unit Schedule																	
Plan ID	Service Area	Manufacturer or Equal	Model #	Supply CFM	O.A. CFM	ESP (in w.c.)	Min. Heating Capacity	Total Cooling Cap.	SEER	AFUE	Volts/Phase	Max Fuse Size	MCA	Size	Weight	Accessories	Comments
RTU 1	Weight Room	Carrier	4YCC3030C1025A	970	260	0.15	60,000	29,000	13	80%	208 V / 3 ph	25	16	44" x 49" x 41"	394	1, 2	1, 2, 3

Accessories:
1. 0-100% Economizer with Barometric Relief
2. Side Exhaust and Return

Comments:
1. Install unit using the factory recommended specifications
2. Equivalent manufacturers are Carrier and Daikin (McQuay)
3. Roof Curb mounted

Air Distribution Device Schedule										
Plan ID	Service	Manufacturer	Model #	Type	CFM Range	Panel Size	Neck Size	Finish	Accessories	Comments
A	Supply	Metalaire	3100	Diffuser	100 -156	10" dia	0'-6"	White		1
B	Return	Metalaire	CCF5	Filter Grill	115 - 130	10" x 8"	8" x 6"	White	1	1
C	Return	Metalaire	CCF5	Filter Grill	325 - 375	14" x 14"	12" x 12"	White	1	1

Accessories:
1. 2" MERV 8 Filter

Comments:
1. Comparable manufacturers are Price, Hart and Cooley

Outside Air Requirements per North Carolina Mechanical Code: Table 403.3, pg27									
Area	Rp CFM/person (pp OA Rate)	Pz Zone Population	Ra CFM/Sqft (area OA rate)	Az Zone occupiable floor area	CFM/Sqft (exhaust air flow rate)	Vbz Breathing Zone Air	Ez Zone Efficiency	Voz Outdoor Air Requirement (single zone)	Outdoor Air Provided
Weight Room	20	5	0.06	500		130	0.80	163	170
Locker Room			0.50	95		48	0.80	60	60
Corridor			0.06	80		5	0.80	7	10
Storage			0.12	95		12	0.80	15	20
Totals:								245	260

Comments:
1. Base equation is Vbz = (Rp* Pz + Ra * Az) * Ez for single zone systems
2. This project is a single zone system

General Installation Requirements

1. Drawings are diagrammatic and are intended to convey scope and general arrangements unless otherwise indicated. They do not show every rise, fitting, offset and detail. It is the contractor's responsibility to read and understand the scope and intent of the drawings and specifications and deliver a complete and operational system that performs to the specifications and documents provided.
2. All mechanical permits and inspection fees shall be obtained and paid by the mechanical contractor.
3. Contractor is responsible for materials and installing the work in accordance with all applicable local, state and national codes.
4. Do not scale drawing for measurements.
5. It is the contractor's responsibility to verfiy duct and pipe paths are free of obstruction and reroute as necessary should an obstruction occur.
6. It is the contractor's responsibility to coordinate with the gas and power company to arrange and facilitate shutdown of utilities as necessary to integrate new system.
7. It is the contractor responsibility to survey existing conditions and make adjustments to duct size, route and configurations to deliver the required air to the system zones.
8. Install all equipment using the manufacturers recommended installation procedures.
9. It is the contractor's responsiblity to notify and coordinate with building owner when work will cause any interruption in services to building whether utilities, path obstruction, etc..
10. The contractor will provide protection of materials, tools and equipment during the construction phase including protective covers, shields, plugs, caps, boxs and temporary fences.
11. All equipment shall be U.L. Listed.
12. All cutting and patching of walls and floors for mechanical equipment shall be the responsibility of the mechanical contractor.

GAS PIPING NOTES

1. Minimum gas piping size shall be ½"
2. Gas piping shall be installed to the requirements of the North Carolina fuel gas code and NFPA Standard No. 54. All inside piping to be supported by clevis hangers with galvanized rod with a maximum of 8' on center.
3. Gas piping shall be tested in accordance with the procedures noted in NFPA Standard No. 54. All tests required by the local gas inspection department or gas company shall also be provided.
4. Paint all gas piping with two coats of yellow enamel and stencil "Gas" on pipe at 6' -0" centers.
5. Gas valves shall be 150, 125 psi rated, non-lubricated plug type with bronze body and bronze plug.
6. Provide unions, flanges, coupling and fittings at connection to all valves and equipment. Do not use direct welded or threaded connection to valves or equipment.
7. Provide non-conducting dielectric unions whenever connecting dissimilar metals.
8. Gas piping routed on the roof shall have pipe supported provided in accordance with the International Fuel Gas Code section#415.1

Gas Load Requirements				
Item	Description	Qty	Input MBH	Total MBH
RTU1	New Rooftop Unit	1	75	75
TOTAL BUILDING LOAD MBH = 75				

GAS PIPE SIZING CALCULATIONS

- NCFGC Table 402.4(3) - 2.0 PSIG W/1.0 PSIG pressure drop
- Total Gas Input: 75
- High Pressure: P1=2.0 PSIG P2=1.0 PSIG
- Length: 150'-0" LN/FT
- Fittings Factor: 1.2 (20%)
- Total Equivalent Length of 180 ft
- Natural Gas Steel: Schedule 40 Metallic Pipe

Mechanical Installation Requirements

1. Furnish all labor, material and equipment required for the complete installation and operation of all systems in this section of work in accordance with recommended practice and all applicable codes.
2. Mechanical contractor shall guarantee all work and materials for one year, effective the day the project is accepted by the owner. Refrigerant compressors shall be guaranteed for five years.
3. Seal the joints airtight between package units and supply ducts. Seal joints above the roof and not tranversing through the target spaces.
4. Airtight seals shall be field applied mastic complying with UL 181 A-M or mastic tape complying with UL 181 A-P
5. Provide and install permanent tags in a location that is readily visible on all installed equipment that inlcudes all pertinent operating information including; make, model no., capacity, voltage, ampacity, heating data, cooling data. See specs for details.
6. Contractor will locate equipment as such so that maintenance personnel will have access to panels, control boards and valves.
7. Contractor will perform a test and balance of the system in accordance with the 2012 NCECC section 503.2.9. Test shall result in +5% to -5% of design flow.
8. Contractor will follow the lastest SMANCA HVAC Duct Construction Standards for duct sheet thickness and fastening methods.
9. All control wire shall be provided by Mechanical Contractor.
10. Support the duct routes with a maximum of 10' between centerline of supports.
11. All equipment supports are required to meet ASCE 9.6.
12. Contractor will provide and install a single RTU to supply heating and cooling to space.
13. Contractor will provide and install a single restroom exhaust fan.

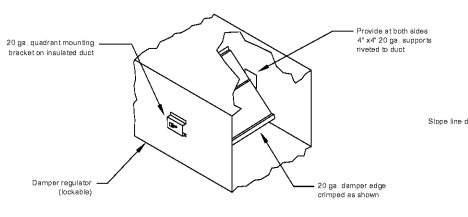

1 / M0.1 Volume Damper
Scale: N/A

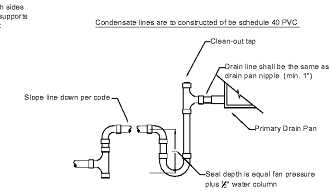

2 / M0.1 Condensate Trap
Scale: N/A

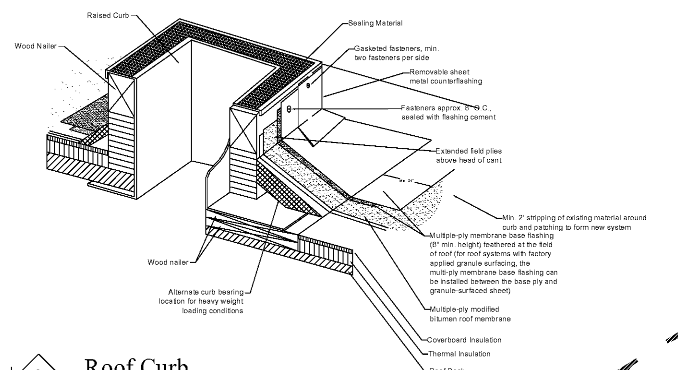

3 / M0.1 Roof Curb
Scale: N/A

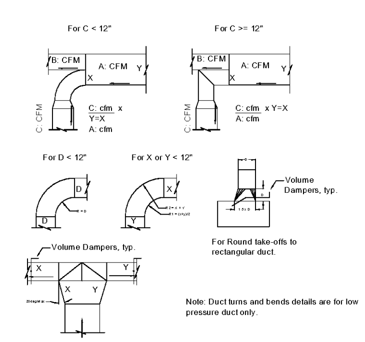

4 / M0.1 Duct Turn and Bends
Scale: N/A

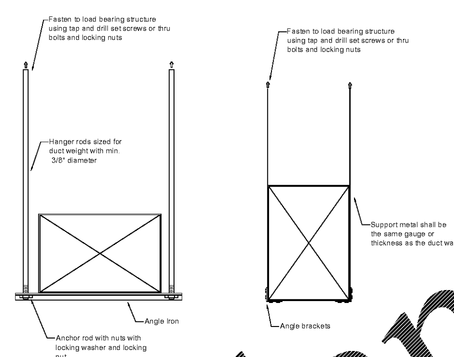

5 / M0.1 Duct Supports
Scale: N/A

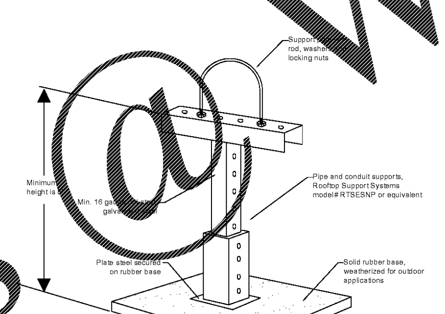

6 / M0.1 Roof Pipe Support
Scale: N/A

Legends, Symbols & Icons

- Rect. Diffuser, 4 Way Distr.
- Rect. Diffuser, 3 Way Distr.
- Rect. Diffuser, 2 Way Distr.
- Rect. Diffuser, 1 Way Distr.
- Rect. Corner Diffuser, 2 Way Distr.
- Round Diffuser
- Return Air Grille
- Exhaust Grille or Exhaust Fan
- Register and Grille, adjustable
- A , 10" x 12" / 400 CFM — Register, Diffuser & Grille, Call out (Spec. Type, Neck Size, Air Volume Flow)
- 10 x 12 — Rect. Rigid Duct
- 10 Dia — Round Rigid Duct
- 10 x 12 — Lined Rect. Rigid Duct
- Rigid Duct Transition
- Flexible Duct
- Vertical Duct Conn. Normal to viewing plane
- Stand. Rect. Take-off w. Vol. Damper
- Rect. to Round Take-off
- Round. to Round Take-off
- 90 deg. Turn Elbow w. Turning Vanes
- Smooth Turn Elbow Raduis = 1.5 Duct Depth
- Manual Damper
- SD — Smoke Damper
- FD — Fire Damper
- DD — Duct Smoke Detector
- DH — Duct Heater
- VAV, A1 — Variable Air Volume Box, Static or Fan (Spec. Type)
- PS,1 — Pressure Sensor (Spec. Type)
- HS,1 — Humidity Sensor (Spec. Type)
- BK,1 — Boiler Kill Switch (Spec. Type)
- T,1 — Thermostat (Spec. Type)
- TS,1 — Temperature Sensor (Spec. Type)
- FS,1 — Flow Switch (Spec. Type)
- Gate Valve
- Ball Valve
- Butterfly Valve
- Check Valve
- Actuated Valve
- Pressure Reducer
- Pressure Safety Valve (Relief)
- Angle Valve
- Three Way Valve
- HWS — Hot Water Supply
- HWR — Hot Water Return
- CHWS — Chilled Water Supply
- CHWR — Chilled Water Return
- COND — Condensate Line
- GAS — Gas Supply Line
- Strainer
- Line Reducer
- Connect to existing at this point
- Remove to this point
- 1 — Key Note Icon

1. THIS DRAWING IS THE PROPERTY OF A.L.R. ARCHITECTURE, P.A. AND IS NOT TO BE REPRODUCED OR COPIED IN WHOLE OR IN PART. IT IS NOT TO BE USED ON ANY OTHER PROJECT AND IS TO BE RETURNED ON REQUEST.
2. MATERIALS, DIMENSIONS AND ALL OTHER CONDITIONS WHICH ARE NOT OTHER WISE DEFINED ON THIS DRAWING SHALL BE CONSTRUED AS HAVING THE SAME MEANING AS SIMILARLY INDICATED CONDITIONS WHICH ARE MORE FULLY DEFINED ELSEWHERE ON THIS PROJECT OR OTHER DRAWINGS FOR THIS PROJECT.

Revisions		
No.	Date	Descrip.

ADDITION
FOR
City of Charlotte
Engineering & Property Management
CFD
FIRE STATION 15
3617 FRONTENAC AVENUE
CHARLOTTE, NC 28215

NORTH CAROLINA PROFESSIONAL ENGINEER SEAL 036300 HAKEEM R. BAILEY
07/25/2017

AeroRaq Engineering Inc
Engineering Services
8511 Davis Parkway, Suite C6-205
Charlotte, North Carolina 28269
Firm License # C-3509
Phone: 704 469 8463

ALR architecture
www.alr-arch.com

Mechanical Schedules
SHEET TITLE:

M0.1
SHEET NUMBER:

Order Plans @ www.LDILine.com