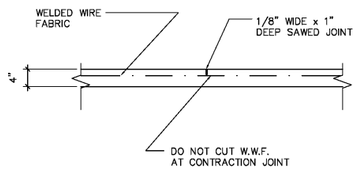

1 SLAB ON GRADE CONTRACTION JOINT DETAIL
S200 SCALE: 3/4"=1'-0"

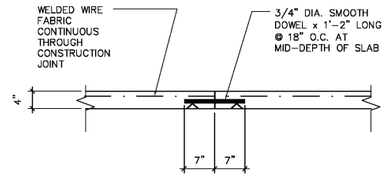

2 SLAB ON GRADE CONSTRUCTION JOINT DETAIL
S200 SCALE: 3/4"=1'-0"

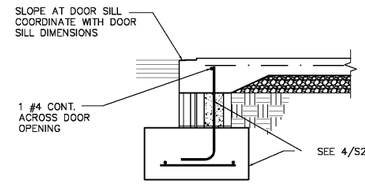

3 SECTION AT DOOR SILL
S200 3/4"=1'-0"

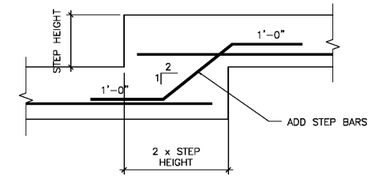

4 TYPICAL STEPPED FOOTING DETAIL
S200 3/4" = 1'-0"

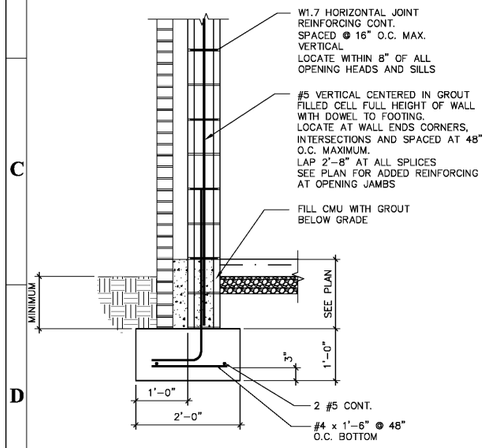

5 PERIMETER FOUNDATION DETAIL
S200 3/4"=1'-0"

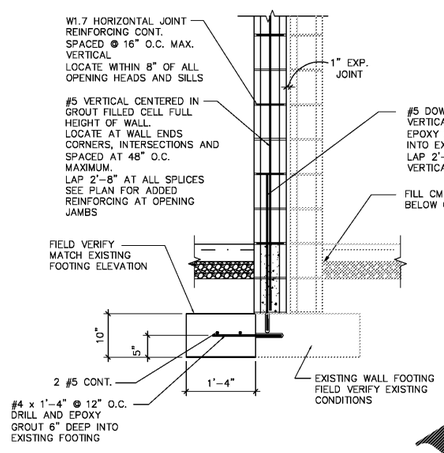

6 SECTION AT EXISTING FOUNDATION
S200 3/4"=1'-0"

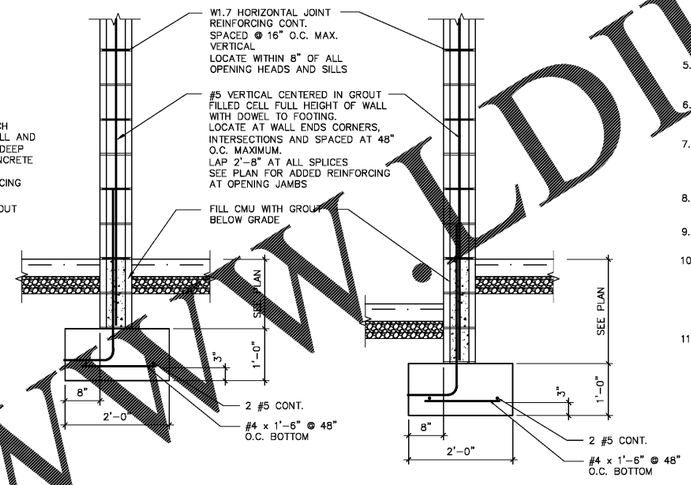

7 INTERIOR WALL FOUNDATION
S200 3/4"=1'-0"

7A INTERIOR WALL FOUNDATION AT SLAB ELEVATION STEP
S200 3/4"=1'-0"

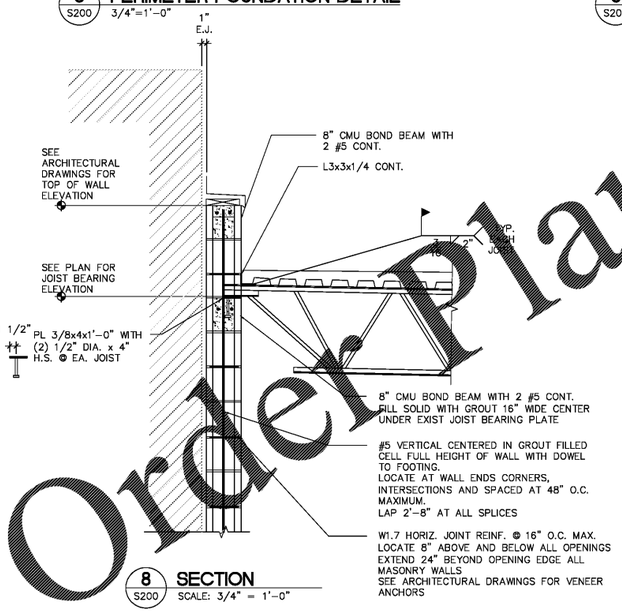

8 SECTION
S200 SCALE: 3/4" = 1'-0"

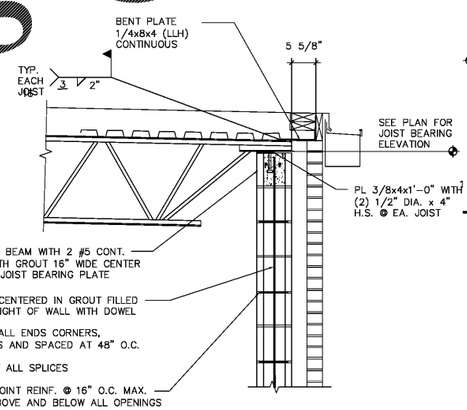

9 SECTION
S200 SCALE: 3/4" = 1'-0"

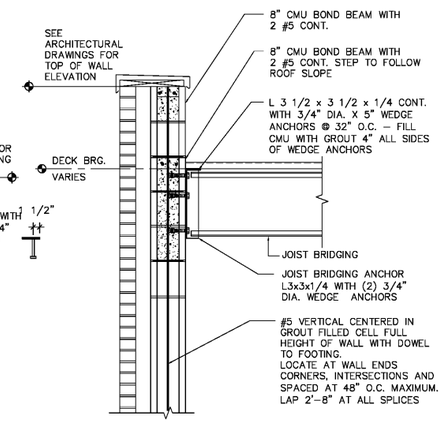

10 SECTION
S200 SCALE: 3/4" = 1'-0"

GENERAL NOTES

1. THESE STRUCTURAL DRAWINGS HAVE BEEN PREPARED IN ACCORDANCE WITH THE 2012 NC STATE BUILDING CODE
2. ROOF DESIGN LOADS:

DEAD LOADS:		DESIGN LIVE LOADS	
ROOF	– 20 PSF	ROOF (BASIC)	– 20 PSF
		SNOW LOAD	Pg = 10 PSF
			Is = 1.2
			Ct = 1.0
FLOOR	– 50 PSF	FLOOR	– 100 PSF

3. WIND LOAD 90 MPH EXPOSURE C
   IMPORTANCE FACTOR 1.00
   INTERNAL PRESSURE .18
   WIND BASE SHEAR Vx = 12K Vy = 8K
4. SEISMIC LOAD SEISMIC IMPORTANCE FACTOR 1.5
   OCCUPANCY CATEGORY 4
   MAPPED SPECTRAL RESPONSE ACCELERATIONS Ss = 0.335
   S1 = 0.109
   SITE CLASS D
   SPECTRAL RESPONSE COEFFICIENTS Sds = 0.342
   DESIGN SITE SPECIFIC COEFFICIENTS Sd1 = 0.172
   SEISMIC DESIGN CATEGORY C
   BASIC SEISMIC FORCE RESISTING SYSTEM:
   ORDINARY REINFORCED MASONRY SHEARWALLS
   BUILDING DESIGN BASE SHEAR 25K
   SEISMIC RESPONSE COEFFICIENT Cs 0.171
   RESPONSE MODIFICATION FACTOR R 2.0
   ANALYSIS PROCEDURE EQUIVALENT LATERAL FORCE
5. CONTRACTOR SHALL SURVEY THE EXISTING STRUCTURE TO VERIFY THAT ALL MODIFICATIONS INDICATED ARE FEASIBLE AND PRACTICAL AND SHALL NOTIFY THE ENGINEER OF ANY DISCREPANCIES OR UNUSUAL CONDITIONS.
6. CONTRACTOR SHALL PROVIDE ALL SHORING OF EXISTING STRUCTURE AS REQUIRED DURING DEMOLITION AND CONSTRUCTION TO MAINTAIN STABILITY OF STRUCTURE.
7. IF, AFTER EXCAVATION, THE CONDITION OF THE SOIL INDICATES A SAFE BEARING CAPACITY OF LESS THAN 2000 PSF. THE STRUCTURAL ENGINEER OF RECORD SHALL BE NOTIFIED AND THE FOOTINGS REVISED IF NECESSARY.
8. ALL CONCRETE SHALL BE STANDARD WEIGHT 4000 P.S.I. COMPRESSIVE STRENGTH AT 28 DAYS. MAXIMUM SLUMP SHALL BE 4".
9. CONCRETE WORK SHALL CONFORM TO ACI 318 (REINF. CONCRETE) AND/OR 318.1 (PLAIN CONCRETE).
10. REINFORCING BARS SHALL CONFORM WITH ASTM A 615. ALL BARS SHALL BE GRADE 60. WELDED WIRE FABRIC SHALL CONFORM TO ASTM A82 AND ASTM A185. REBAR SUPPORT DEVICES SHALL CONFORM TO THE CRSI MANUAL OF STANDARD PRACTICE. PROVIDE CORNER BARS FOR ALL CONTINUOUS BARS AT BUILDING CORNERS LAP 48 BAR DIA. EACH END.
    LAP WELDED WIRE FABRIC ONE SQUARE + 2" AT ALL SHEET EDGES.
11. CONCRETE MASONRY NOTES:
    A. CONCRETE MASONRY CONSTRUCTION SHALL CONFORM TO ACI 530–05.
    B. CONCRETE MASONRY UNITS SHALL CONFORM TO ASTM C 90. COMPRESSIVE STRENGTH OF THE UNITS SHALL BE A MINIMUM STRENGTH OF 2000 PSI
    C. REINFORCING STEEL SHALL CONFORM TO ASTM A 615, GRADE 60. SHALL BE LAPPED 48 BAR DIAMETER AT ALL SPLICES UNLESS OTHERWISE NOTED.
    D. ALL CONTINUOUS BARS SHALL BE LAP SPLICED 48 BAR DIAMETERS UNLESS NOTED OTHERWISE. USE TYPE M OR S MORTAR. TYPE M MORTAR SHALL HAVE AN AVERAGE COMPRESSIVE STRENGTH AT 28 DAYS OF 2500 PSI AND TYPE S MORTAR 1800 PSI.
    E. ALL REINFORCED CELLS AND CELLS BELOW GRADE SHALL BE GROUTED SOLID.
    F. GROUT FILL SHALL BE 2000 PSI CONFORMING TO ASTM C 475, TYPE PM. FINE GROUT SHALL BE USED WHEN CORE SPACES IS LESS THAN 3 INCHES. COARSE GROUT, WITH AGGREGATE FROM 1/2" TO #4 NOMINAL SIZE, SHALL BE USED WHEN CORE SPACE IS GREATER THAN 3 INCHES.
12. EPOXY SHALL BE HILTI HY 200 OR EQUAL.
13. ALL STRUCTURAL STEEL WIDE FLANGE SHAPES SHALL CONFORM TO ASTM–A 552 OR A992 GRADE 50.
    ALL OTHER STEEL AND MISCELLANEOUS STEEL SHALL CONFORM TO ASTM–A36.
    STRUCTURAL TUBE COLUMNS SHALL CONFORM TO ASTM A–500, GRADE B, AND STRUCTURAL PIPE COLUMNS SHALL CONFORM TO ASTM A–501 OR ASTM A–53, TYPES E OR S, GRADE B.
    DESIGN, DETAILING, FABRICATION AND ERECTION OF STRUCTURAL STEEL SHALL BE IN ACCORDANCE WITH THE AISC CODE AND DETAILING MANUAL. NO STRUCTURAL MEMBERS SHALL BE SPLICED EXCEPT AS SHOWN ON APPROVED SHOP DRAWINGS.
14. ALL SHOP AND FIELD WELDING SHALL BE BY A CERTIFIED WELDER AND SHALL CONFORM TO AWS STANDARDS.
15. THE STRUCTURAL MEMBERS OF THIS PROJECT HAVE BEEN DESIGNED BY THE STRUCTURAL ENGINEER TO RESIST THE REQUIRED CODE VERTICAL AND LATERAL FORCES THAT COULD OCCUR IN THE FINAL COMPLETED STRUCTURE ONLY. THE GENERAL CONTRACTOR IS RESPONSIBLE FOR PROVIDING ALL REQUIRED BRACING DURING CONSTRUCTION TO MAINTAIN THE STABILITY AND SAFETY OF ALL STRUCTURAL ELEMENTS DURING THE CONSTRUCTION PROCESS UNTIL THE STRUCTURE IS TIED TOGETHER AND COMPLETED.
16. DESIGN, DETAILING, FABRICATION AND ERECTION OF STEEL BAR JOISTS AND JOIST GIRDERS SHALL BE IN ACCORDANCE WITH THE "STANDARD SPECIFICATIONS AND LOAD TABLES" OF THE STEEL JOIST INSTITUTE. JOISTS SHALL BE DESIGNED TO SUPPORT ADDITIONAL LOADS SHOWN ON PLANS.
17. JOIST BRIDGING SHALL BE SECURELY FASTENED TO THE JOISTS, BEAMS AND WALLS PRIOR TO STARTING PLACEMENT OF METAL DECK. ALL JOIST 40 FEET AND LONGER REQUIRE A ROW OF BOLTED CROSS BRIDGING TO BE IN PLACE BEFORE SLACKING OF HOISTING LINES.
18. STEEL BAR JOISTS SHALL BE ANCHORED TO STEEL BEAMS OR PLATES WITH A MINIMUM OF 1 1/2" OF 3/16" FILLET WELD FOR K AND KCS SERIES JOISTS ON EACH SIDE OF THE JOIST, UNLESS NOTED OTHERWISE.
19. ROOF DECK SHALL BE FORMED FROM STEEL CONFORMING TO ASTM A653 WITH A MINIMUM YIELD STRENGTH OF 33 KSI. STEEL DECK SHALL BE AS SHOWN ON DRAWINGS WITH SUFFICIENT LENGTH TO PROVIDE A 3-SPAN CONDITION.
20. ROOF DECK SHALL HAVE THE FOLLOWING MINIMUM PROPERTIES:

DEPTH	GAGE	THICKNESS	I IN4/FT
1 1/2"	22 GA	0.0295"	0.212

21. ROOF DECK SHALL BE SECURELY FASTENED TO THE SUPPORTING STRUCTURAL MEMBERS BY THE SPECIFIED WELD PATTERN AS INDICATED ON THE DRAWINGS USING A MINIMUM OF 5/8" DIAMETER PUDDLE WELDS.

1. THIS DRAWING IS THE PROPERTY OF A.L.R. ARCHITECTURE, P.A. AND IS NOT TO BE REPRODUCED OR COPIED IN WHOLE OR IN PART. IT IS NOT TO BE USED ON ANY OTHER PROJECT AND IS TO BE RETURNED ON REQUEST.
2. MATERIALS, DIMENSIONS AND ALL OTHER CONDITIONS WHICH ARE NOT OTHER WISE DEFINED ON THIS DRAWING SHALL BE CONSTRUED AS HAVING THE SAME MEANING AS SIMILARLY INDICATED CONDITIONS WHICH ARE MORE FULLY DEFINED ELSEWHERE ON THIS PROJECT OR OTHER DRAWINGS FOR THIS PROJECT.

Revisions

No.	Date	Descrip.

ADDITION
FOR
City of Charlotte
Engineering & Property Management
CFD
FIRE STATION 15
3617 FRONTENAC AVENUE
CHARLOTTE, NC 28215

ISSUED FOR REVIEW
3-29-17
NOT FOR CONSTRUCTION

NORTH CAROLINA PROFESSIONAL SEAL 13509 ENGINEER PHILLIP RITCHIE 7/25/17

Ritchie Engineering, P.C.
3023 Markworth Avenue
Charlotte, NC 28210
704 351 3313

NORTH CAROLINA Ritchie Engineering, PC No. C-2782 CERTIFICATE OF AUTHORIZATION

A.L.R. Architecture
517 EAST BLVD.
SUITE 100
CHARLOTTE, NC 28203
PHONE: 704.348.2699
FAX: 704.348.9399

SECTIONS AND DETAILS

SHEET TITLE:

S200
SHEET NUMBER:
PROJECT# 1609.05
DATE: 07/25/2017

CD

www.DIline.com
Order Plans @