LIGHTING FIXTURE SCHEDULE

TYPE	VENDOR	FURNISHED BY	CATALOG NUMBER	VOLTS	WATTS	LAMP ORDER NUMBER	LAMP QTY	MOUNTING	DESCRIPTION
1L	GE LIGHTING	OWNER	ALC50H58D8SNSTKNW	120	75 W	INTEGRAL LED	--	SURFACE	8' STRIP - LED
10L	ACUITY	OWNER	2BLT4-40L-ADP-LP840	120	46 W	INTEGRAL LED	--	RECESSED	RECESSED SALES LIGHT
11	GE LIGHTING	OWNER	EESW 0 WE N 57 A 1 N BLCK	120/277	20 W	INTEGRAL LED	--	WALL	SECURITY LIGHT
16	ACUITY	OWNER	LQM S W 1 R 120/277 EL N SD90 M6	120/277	1 W	INTEGRAL LED	--	WALL	EXIT SIGN (SINGLE FACE)
17	ACUITY	OWNER	ELM2 LED SD	120/277	2 W	INTEGRAL LED	--	WALL	EMERGENCY LIGHT
18	ACUITY	OWNER	ELMLT W LP06VS LTP SD	120/277	3 W	INTEGRAL LED	2	WALL	EMERGENCY LIGHT
19	ACUITY	OWNER	ELMLT W LP06VS LTP SD PM	120/277	3 W	INTEGRAL LED	2	STEM	EMERGENCY LIGHT
50A	ACUITY	OWNER	VAP 59LED/R9 SYM L/SP NAWT	120	57 W	INTEGRAL LED	--	SURFACE	ENCLOSED LED LIGHT

EQUIPMENT SCHEDULE

NO.	DESCRIPTION	MANUFACTURER	MODEL NO.	VOLT/PH-VA	AMPS	HP	TERMINATION
D017	MICROWAVE OVEN	AMANA	RCS10MPSA	120 V/1-1584 VA	13.2 A		NEMA: 5-15R
MG037	ICEE MACHINE	ICEE	FBD 563HC	208 V/2-4940 VA	23.7 A		NEMA: L6-30R
MG042	DUAL COFFEE BREWER	BUNN	SH DBC 33500	208 V/2-4971 VA	23.9 A		NEMA: L14-30R
MG045	MICROWAVE OVEN	AMANA	RCS10MPSA	120 V/1-180 VA	15 A		NEMA: 5-20R
MG059	ICE TEA DISPENSER	BUNN	41400.0002	120 V/1-1680 VA	14 A		NEMA: 5-15R
MG064	HOT BEVERAGE DISPENSER	BUNN	38100.005	120 V/1-1584 VA	13.2 A		NEMA: 5-15R
MG066	ICE BEVERAGE DISPENSER	LANCER	FS30	120 V/1-840 VA	7 A		NEMA: 5-15R
RD0135	ICE CUBER	SCOTSMAN	CO530SA-1C	120 V/1-1656 VA	13.8 A		JUNCTION BOX

CONNECTED LOADS TABLE

LOAD CLASSIFICATION	LOAD (VA)
HEATING	
COOLING	15120 VA
LIGHTS	6083 VA
CONTINUOUS	
NON-CONTINUOUS	11030 VA
RECEPTACLES	11039 VA
MOTORS	14400 VA
REFRIGERATION	
KITCHEN	
*TOTAL (Less the smaller of Heating or Cooling	57672 VA

Notes:
* POWER COMPANY SHALL APPLY PROPER DEMAND FACTORS TO CALCULATE ESTIMATED MAXIMUM DEMAND.

PANEL A — POWER INTEGRITY NEW

120/208 Wye, 3PH, 4W
225 A MAIN CIRCUIT BREAKER
10,000 AIC
SURFACE MOUNT
GROUND BAR
ISOLATED GROUND BAR

SERVES: FUELING STATION
LOCATION:
PANEL FURNISHED BY POWER INTEGRITY

	DESCRIPTION	WIRE SIZE	BRKR	PL	A		B		C		PL	BRKR	WIRE SIZE	DESCRIPTION	
1	STP #1 UNLEADED (2,6,ES)	10	20 A	2	1.44	1.44					2	20 A	10	STP #2 SUPER UNLD (2,6,ES)	2
3							1.44	1.44							4
5	SPACE	--	--	--					0.00	0.53	1	20 A	12	ROOFTOP EXHAUST FAN 1	6
7	STP #3 DIESEL (2,6,ES)	10	20 A	2	1.44	1.44					2	20 A	10	STP #4 UNLEADED (2,6,ES)	8
9							1.44	1.44							10
11	AIR MACHINE (4,6)	12	20 A	1					1.20	0.00	1	20 A	--	SPARE	12
13	CASHIER RECEPTACLE IG (1)	12	15 A	1	0.18	0.36					1	20 A	12	OTHER INCOME SIGN	14
15	CASHIER RECEPTACLE IG (1)	12	15 A	1			0.18	0.00			--	--	--	SPACE	16
17	CASHIER RECEPTACLE IG (1)	12	15 A	1					0.72	0.00	--	--	--	SPACE	18
19	SPACE	--	--	--	0.00	0.63					1	20 A	12	DRINKING FOUNTAINS (4)	20
21	SPACE	--	--	--			0.00	0.00			--	--	--	SPACE	22
23	SERVICE BLDG SIGN LT (11)	12	20 A	1					0.11	0.36	1	20 A	12	OTHER INCOME (1)	24
25	BLDG INTERIOR LIGHTS	12	20 A	1	0.72	1.73					1	20 A	8	HAND DRYER (2,6)	26
27	WATER HEATER (2)	10	30 A	2			2.25	1.66			1	20 A	10	RD 135 ICE CUBER (2,6)	28
29									2.25	1.66	1	20 A	10	RD 135 ICE CUBER (2,6)	30
31	CANOPY NIGHT LIGHTS (11)	12	20 A	1	0.35	0.00					--	--	--	SPACE	32
33	MG059 ICED TEA (6)	10	20 A	1			1.68	0.00			--	--	--	SPACE	34
35	RESTROOM RECEPTS	12	20 A	1					0.18	0.62	1	20 A	10	CANOPY LIGHTS (6,11)	36
37	SECURITY LIGHTS (11)	12	20 A	1	0.06	0.07					1	20 A	12	AWNING LIGHTS (11)	38
39	MG042 DUAL COFFEE BREWER	10	30 A	2			2.49	0.88			1	20 A	10	CANOPY LIGHTS (6,11)	40
41									2.49	0.26	1	20 A	10	CA[illegible] LIGHTS (6,11)	[illegible]
43	MG064 COFFEE WARMER	12	15 A	1	1.58	0.00					1	20 A	--	SPARE	[illegible]
45	SPACE	--	--	--			0.00	0.60			1	20 A	12	FASCIA LIGHTS (11)	46
47	RECEPTACLES	12	20 A	1					0.54	1.20	1	20 A	12	FASCIA LIGHTS (11)	48
49	SPACE	--	--	--	0.00	0.18					1	20 A	12	DISPLAY [illegible]ER	50
51	DOOR CHIME	12	15 A	1			0.18	0.18			[illegible]	20 A	12	DISPLAY CO[illegible]	52
53	MONITORS	12	20 A	1					0.16	0.1[illegible]	[illegible]	20 A	12	DISPLAY COO[illegible]	54
55	SPARE	--	20 A	1	0.00	0.00					[illegible]	--	--	SPACE	56
57	SPARE	--	20 A	1			0.00	0.00			[illegible]	[illegible]	--	SPACE	58
59	SPARE	--	20 A	1					[illegible]	0.00	--	[illegible]	--	SPACE	60
				TOTAL CONNECTED	11.62		15.85		[illegible]45		KVA				
				TOTAL CONNECTED	96.83		133.16		[illegible]		AMPS				
				TOTAL LOAD	39.92		KVA		11[illegible]		AMPS				
	PER NEC ARTICLE 220			FEEDER LOAD	44.02		[illegible]		122[illegible]		AMPS				

PANEL B — POWER INTEGRITY NEW

120/208 Wye, 3PH, 4W
225 A MAIN CIRCUIT BREAKER
10,000 AIC
SURFACE MOUNT
GROUND BAR
ISOLATED GROUND BAR

SERVES: BUILDING REAR CLOSET
LOCATION:
PANEL FURNISHED BY POWER INTEGRITY

	DESCRIPTION	WIRE SIZE	BRKR	PL	A		B		C		PL	BRKR	WIRE SIZE	DESCRIPTION	
1	E-STOP OWER [illegible]	12	15[illegible]	[illegible]	0.09	[illegible]					2	20 A	12	DISPENSER #1 (3,SN,ES)	2
3	[illegible]HT CONTROL [illegible]OWER	12	15 A	[illegible]			0.01	0.00							4
[illegible]	[illegible]PENSER #6 (3,[illegible],ES)	12	20 A	[illegible]					0.76	0.54	1	20 A	12	CIGARETTE MERCH RECEPT	6
[illegible]					0.00	0.76					2	20 A	12	DISPENSER #2 (3,SN,ES)	8
9	S[illegible]NITOR PO[illegible]ER (1)	12	20 A	1			0.18	0.00							10
11	DIS[illegible] (3,S[illegible]ES)	1[illegible]	20 A	2					0.76	0.18	1	20 A	12	CASHIER RECEPTACLES	12
13					0.00	0.76					2	20 A	12	DISPENSER #3 (3,SN,ES)	14
15	GAS [illegible]WITCH[illegible]	12	20 A	1			0.36	0.00							16
[illegible]	DISPE[illegible]SER #8 (3,[illegible])	12	20 A	2					0.76	0.18	1	20 A	12	CASHIER RECEPTACLE	18
[illegible]					0.00	0.76					2	20 A	12	DISPENSER #4 (3,SN,ES)	20
21	[illegible]	--	20 A	1			0.00	0.00							22
23	FI[illegible]RM CTRL PANEL (1)	12	20 A	1					0.36	0.18	1	20 A	12	MG045 HOT BEV DISPENSER	24
25	D017 M[illegible]OWAVE (6)	10	20 A	1	1.58	0.76					2	20 A	12	DISPENSER #5 (3,SN,ES)	26
27	MG066 ICE DISPENSER (4)	12	20 A	1			0.84	0.00							28
29	SPACE	--	--	--					0.00	0.74	1	20 A	12	DVR / CAMERA (1)	30
31	ROOFTOP UNIT 1	4	70 A	3	5.04	0.00					--	--	--	SPACE	32
33							5.04	0.00			--	--	--	SPACE	34
35									5.04	1.00	1	20 A	12	ICE MERCHANDISER (4)	36
37	SPACE	--	--	--	0.00	0.18					1	20 A	12	THIN CLIENT / MCLANE	38
39	SPACE	--	--	--			0.00	2.47			2	30 A	10	MG037 ICEE MACHINE (4)	40
41	SPACE	--	--	--					0.00	2.47					42
				TOTAL CONNECTED	10.69		8.90		12.97		KVA				
				TOTAL CONNECTED	91.42		74.17		110.38		AMPS				
				TOTAL LOAD	32.56		KVA		90.39		AMPS				
	PER NEC ARTICLE 220			FEEDER LOAD	32.56		KVA		90.39		AMPS				

PANELBOARD NOTES

1.	TERMINATE GROUND ON ISOLATED GROUND BUS.
2.	INSTALL LOCKING DEVICE FURNISHED WITH PANELBOARD (LOCK-OFF FOR MAINTENANCE).
3.	INSTALL LOCKING DEVICE FURNISHED WITH PANELBOARD (LOCK-ON FOR CRITICAL LOAD).
4.	GFI BREAKER FOR PERSONNEL PROTECTION (5 mA).
5.	GFI BREAKER FOR EQUIPMENT PROTECTION (30 mA).
6.	CONDUCTOR SIZE SHOWN IN PANEL SCHEDULE HAS BEEN INCREASED FOR VOLTAGE DROP. EQUIPMENT PROPORTIONALLY PER NEC. REFERENCE GROUND WIRE SIZING CHART.
7.	REFER TO ONE-LINE DIAGRAM FOR AVAILABLE FAULT CURRENT FOR INTERRUPT RATINGS.
8.	REFER TO ONE-LINE DIAGRAM FOR WIRE SIZES.
9.	FACTORY WIRED TO LOAD.
10.	REFER TO SITE LIGHTING PLAN FOR WIRE SIZES.
11.	THRU CONTACTOR.
SN.	DESIGNATES A SWITCHED NEUTRAL [illegible] BREAKER
ES.	CIRCUIT IS DISCONNECTED BY EM[illegible]RGENCY S[illegible]
(X).	DESIGNATES "SMART" BREAKER

ELECTRICAL SYMBOLS LEGEND

(SYMBOLS A[illegible] ONLY WHEN U[illegible]SED O[illegible]INGS)

SYMBOL	DESCRIPTION
	F[illegible]IXTURE
	FLUORESCENT FIXTURE, NIGHT LIGHT
	EMERGENCY FIXTURE
$	SWITCH, SINGLE POLE
SOS	SWITCH, OCCUPANCY SENSOR
	RECEPTACLE, DUPLEX
	RECEPTACLE, SIMPLEX
	RECEPTACLE, DUPLEX IG
	RECEPTACLE, QUAD
	RECEPTACLE, SIMPLEX TWIST LOCK, ISOLATED GROUND, L5-15R, UNO
J	JUNCTION BOX (WALL MOUNTED/CEILING MOUNTED)
A	ALARM JUNCTION BOX, (WALL MOUNTED/CEILING MOUNTED)
	NON-FUSED DISCONNECT
NEUTRAL, HOTS, IG, GROUND	CIRCUIT, CONCEALED IN WALLS OR CEILING, E INDICATES EXISTING WIRING
	CIRCUIT, CONCEALED IN SLAB FLOOR, E INDICATES EXISTING WIRING
	CIRCUIT, EXPOSED, E INDICATES EXISTING WIRING
▼	TELEPHONE / DATA BOX FOR ISD
	MOTOR
XXX	EQUIPMENT SCHEDULE CALLOUT

ABBREVIATIONS

CU	CONDENSING UNIT
EF	EXHAUST FAN
G	GROUND
GFI	GROUND FAULT CIRCUIT INTERRUPTER
IG	ISOLATED GROUND
SC	SECURITY CAMERA
UH	UNIT HEATER
WH	WATER HEATER
WP	WEATHER PROOF COVERPLATE
WR	WEATHER RESISTANT RECEPTACLE

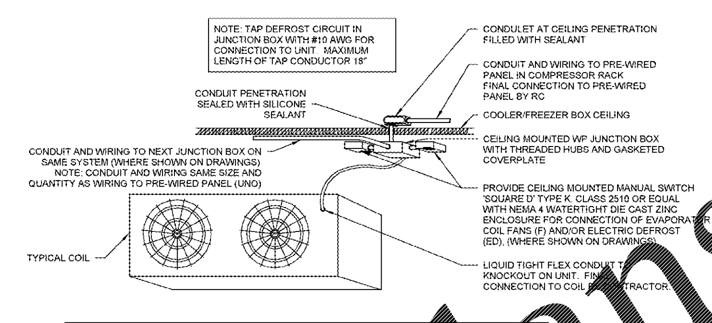

5 EVAPORATOR COIL WIRING
NTS

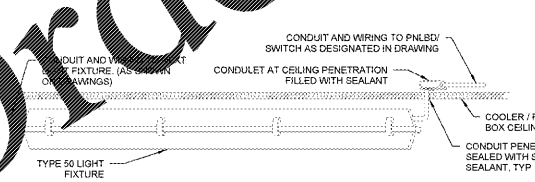

4 COOLER/FREEZER LIGHT WIRING
NTS

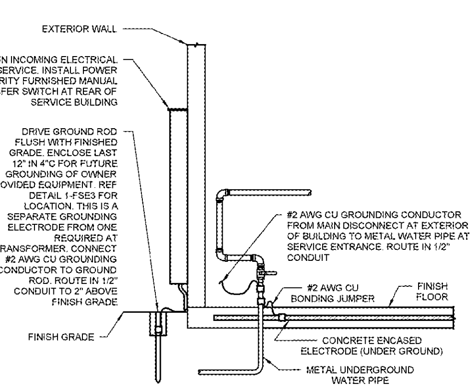

3 GROUNDING ELECTRODE SYSTEM
NTS

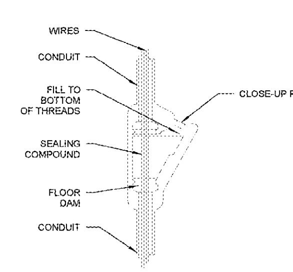

2 CONDUIT SEAL-OFF
NTS

ARC FLASH INFORMATION

CATEGORY 0	USE THIS INFORMATION IN ACCORDANCE WITH APPLICABLE OSHA STANDARDS, NFPA 70E, AND OTHER REQUIRED SAFE ELECTRICAL WORK PRACTICES

18 INCHES — FLASH PROTECTION BOUNDARY
1.2 CAL/CM² — MAX INCIDENT ENERGY AT 18" WORKING DISTANCE
CATEGORY 0 — PPE CATEGORY (PER NFPA 70E-2009)
480 VAC — SHOCK HAZARD WHEN COVER IS OPEN
42 INCHES — LIMITED APPROACH
12 INCHES — RESTRICTED APPROACH } PER NFPA 70E-2009
1 INCH — PROHIBITED APPROACH

ORDER#: XXXXXX
DATE: XX/XX/XX

VALUES PRODUCED BY AN ENGINEERING ANALYSIS. ANY SYSTEM MODIFICATION, ADJUSTMENT OR PROTECTIVE DEVICE SETTINGS, OR FAILURE TO PROPERLY MAINTAIN EQUIPMENT WILL INVALIDATE THIS LABEL.

NOTES:

A. AT APPROXIMATELY 8 WEEKS PRIOR TO POSSESSION DATE, EDC VENDOR SHALL REQUEST AS-BUILT FEEDER INFORMATION (CONDUCTOR MATERIAL, LENGTH, CONDUCTORS PER PHASE, SIZE, INSULATION TYPE, AND CONDUIT TYPE) IN ORDER TO COMPLETE AN ARC FLASH HAZARD STUDY. PROVIDE INFORMATION TO EDC VENDOR BY 7 WEEKS PRIOR TO POSSESSION DATE.

B. FOR EXISTING EQUIPMENT BEING RE-USED, DOCUMENT EXISTING OVERCURRENT PROTECTIVE DEVICE TYPES AND EXISTING FEEDER INFORMATION FOR COORDINATION WITH EDC VENDOR.

C. ARC FLASH INCIDENT ENERGY WARNING LABELS SHALL BE INSTALLED BY EDC VENDOR PRIOR TO POSSESSION.

1 ARC FLASH DETAIL
NTS

SERVICE EQUIPMENT AND PANEL NOTES

1. PROVIDE GROUND FAULT TESTING OF THE SERVICE DISCONNECTS TO COMPLY WITH NEC. ADJUST FACTORY SETTING PER COORDINATION STUDY REPORT PROVIDED BY EDC VENDOR. PRIOR TO FINAL INSPECTION, PROVIDE A WRITTEN COPY OF THE PERFORMANCE TEST TO THE AUTHORITY HAVING JURISDICTION.

STIPULATION FOR RE[illegible]
THIS DRAWING WAS PREPARED FOR USE ON A SPECIFIC SITE AT APOPKA, FL CONTEMPORANEOUSLY WITH ITS ISSUE DATE ON 04/07/17 AND IT IS NOT SUITABLE FOR USE ON A DIFFERENT PROJECT SITE OR AT A LATER TIME. USE OF THIS DRAWING FOR REFERENCE OR EXAMPLE ON ANOTHER PROJECT REQUIRES THE SERVICES OF PROPERLY LICENSED ARCHITECTS AND ENGINEERS. REPRODUCTION OF THIS DRAWING FOR REUSE ON ANOTHER PROJECT IS NOT AUTHORIZED AND MAY BE CONTRARY TO THE LAW.

CONSULTANTS
MPW
MPW ENGINEERING, LLC

Walmart
APOPKA, FL
STORE NO. 6894
JOB NUMBER: 097-16-006 | PROTO | WNM6-740

ISSUE BLOCK

CHECKED BY:	JDG
DRAWN BY:	DJA
FILE NAME:	FSE3.1
PROTO CYCLE:	02/10/17
DOCUMENT DATE:	04/07/17

BID SET.
NOT FOR
CONSTRUCTION

THIS ITEM HAS BEEN ELECTRONICALLY SIGNED AND SEALED BY AARON MORSE, PE ON THE DATE AND/OR TIME STAMP SHOWN USING A DIGITAL SIGNATURE. PRINTED COPIES OF THIS DOCUMENT ARE NOT CONSIDERED SIGNED AND SEALED AND THE SIGNATURE MUST BE VERIFIED ON ANY ELECTRONIC COPIES.

ELECTRICAL SCHEDULES

SHEET:
FSE3.1

Order Plans @ WWW.LDILine.com