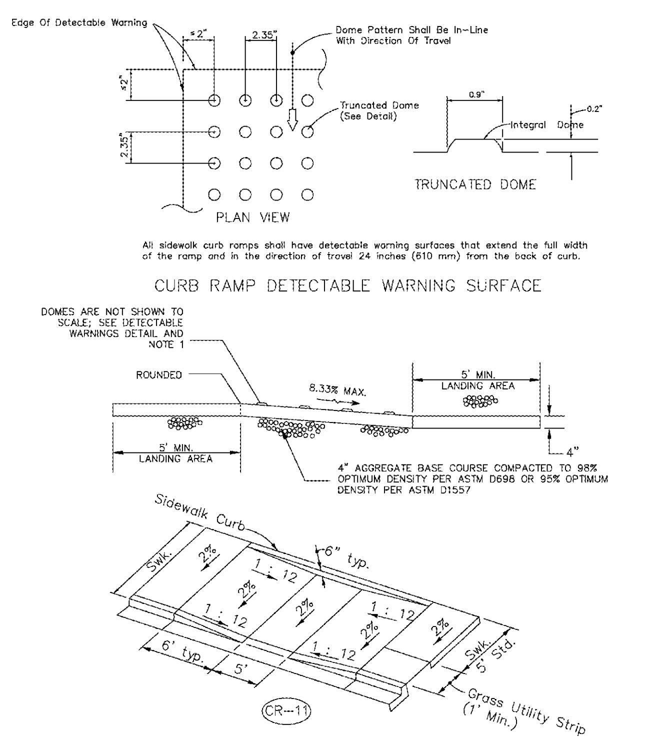

CURB RAMP – GENERAL NOTES & DETAILS

1. Public sidewalk curb ramps shall be constructed in the public right of way at locations that will provide continuous unobstructed pedestrian circulation paths to pedestrian areas, elements and facilities in the public right of way and to accessible pedestrian routes on adjacent sites. Curbed facilities with sidewalks and those without sidewalks are to have curb ramps constructed at all street intersections and at turnouts that have curbed returns. Partial curb returns shall extend to the limit prescribed by FDOT Index No. 515 to accommodate curb ramps. Ramps constructed at locations without sidewalks shall have a 5' x 5' landing constructed at the top of each ramp.

2. The location of curb ramps shall be as shown in the plans, but shall conform to these standard details. All ramps, landings and curbs shall be constructed with minimum 3000 psi, Class A concrete and shall have minimum thickness of 6 inches. All concrete for pedestrian areas shall have a medium broom finish and standard color, unless specifically required by the plans.

3. Curb ramp running slopes at unrestrained sites shall not be steeper than 1 : 12 and cross slope shall not be steeper than 2%. Transition slopes shall not be steeper than 1 : 12.

   When altering existing pedestrian facilities where existing site development precludes the accommodation of a ramp slope of 1 : 12, a running slope between 1 : 12 and 1 : 10 is permitted for a rise of 6" maximum and a running slope of between 1 : 10 and 1 : 8 is permitted for a rise of 3" maximum. Where compliance with the requirements for cross slope cannot be fully met, the minimum feasible cross slope shall be provided.

4. If a curb ramp is located where pedestrians must walk across the ramp, then the walk shall have transitions with a maximum longitudinal slope of 1 : 12. and a 2% cross–slope. Ramps with curb returns may be used to provide guidance, avoid an obstacle, or when R/W limitations prohibit flares. Improvements for directional guidance are required whenever necessary to guide or re–direct the pedestrian towards the receiving ramp.

5. All curb ramps shall have detectable warning surfaces that extend the full width of the ramp and 24" from the back of curb in the direction of travel. Detectable warning surfaces shall be constructed by texturing a truncated dome pattern in conformance with U.S. Department of Justice A.D.A. Standards For Accessible Design, A.D.A. Accessibility Guidelines, Section 4.29.2, (detail shown above left). Transition slopes are not to have detectable warnings. Dome pattern shall be in–line with direction of travel. Use Armor Tile cast–in place detectable warning tiles, or approved equal.

6. The color requirement for detectable warnings is to provide a dark–on–light visual contrast between the detectable warning surface and the adjacent walking surface. Where adjacent walking surfaces are dark colored and/or constructed with materials other than standard Class I Portland Cement Concrete in accordance with the Standard Specifications, the Contractor must provide a detectable warning surface color that provides the necessary contrast, with the adjacent concrete. The standard color is dark red brick colored detectable warning tile with standard concrete unless otherwise noted.

7. Where a curb ramp is constructed within existing curb, curb and gutter or sidewalk, the existing concrete shall be removed to the nearest joint beyond the transition slope so that no remaining section of concrete is less than 5' long. The existing sidewalk shall be removed to the nearest joint beyond the transition slope, if the ramp must extend into the sidewalk.

8. Expansion joints shall be placed at all perimeter edges abutting concrete, but no joints shall be made in the ramp itself.

9. Public sidewalk curb ramps are to be paid for as follows:
   Ramps, landings, curb transitions, flares, ramp and sidewalk curbs are to be paid for under the contract unit price for Concrete Curb Ramps, 6" Thick. Reconstructed curbs beyond the ramp are to be paid for under the contract unit price for concrete curb.

   When a separate pay item for the removal and disposal of existing curb, curb and gutter and/or sidewalk is not provided in the Bid Form, the cost of removal and disposal shall be included under demolition, clearing/grubbing, or in the contract unit price for new curb, curb and gutter or sidewalk, respectively.

10. If curbs are not present on both sides of the walkway, then the concrete is not considered a curb ramp and is therefore may be paid for as 6" concrete sidewalk or driveway.

11. Drop and transition curb may be formed at the time of curb construction or may be monolithic with the ramp, but is included with the pay item for the curb.

12. Two ramp design may be required at certain large radius, signalized, offset or angled intersections. Flares and curb transitions may be replaced with ramp curbs if site conditions warrant.

CURB RAMP NOTES & DETAILS

NTS

1

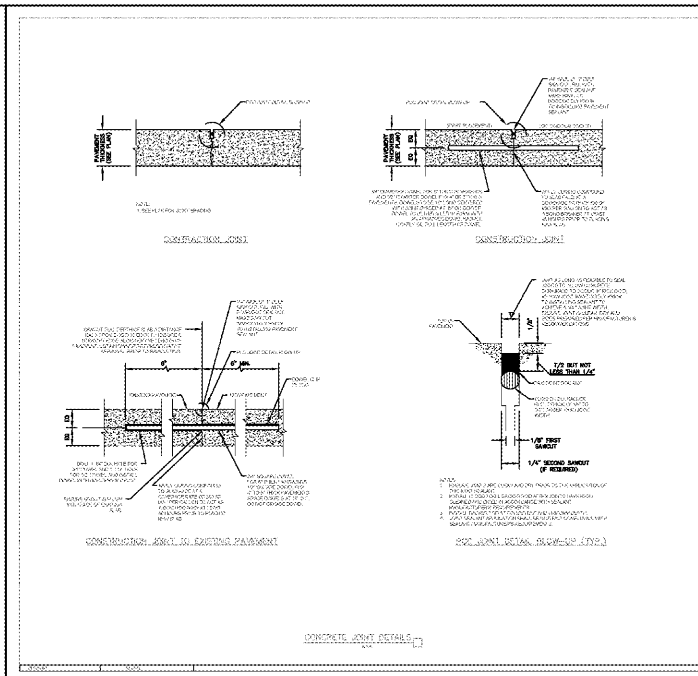

2

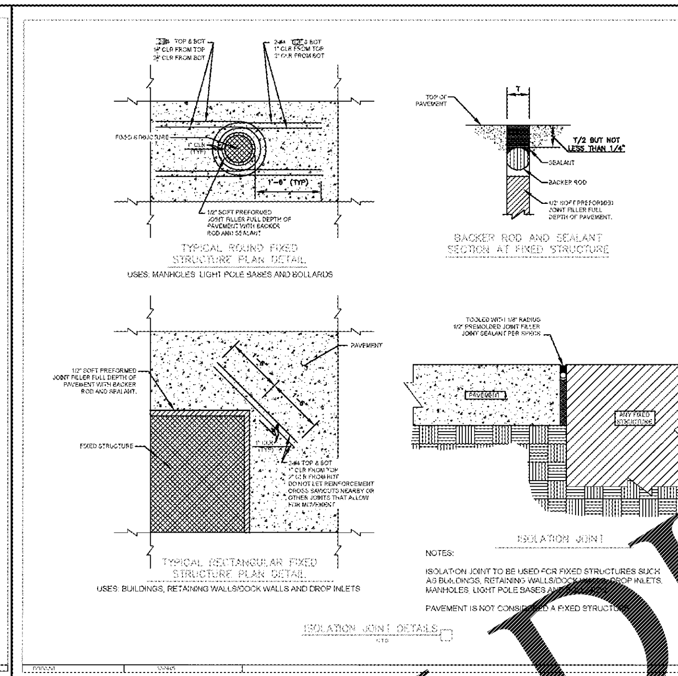

3

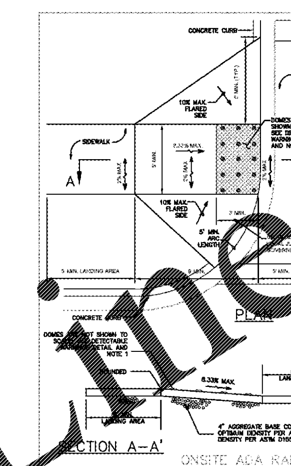

4

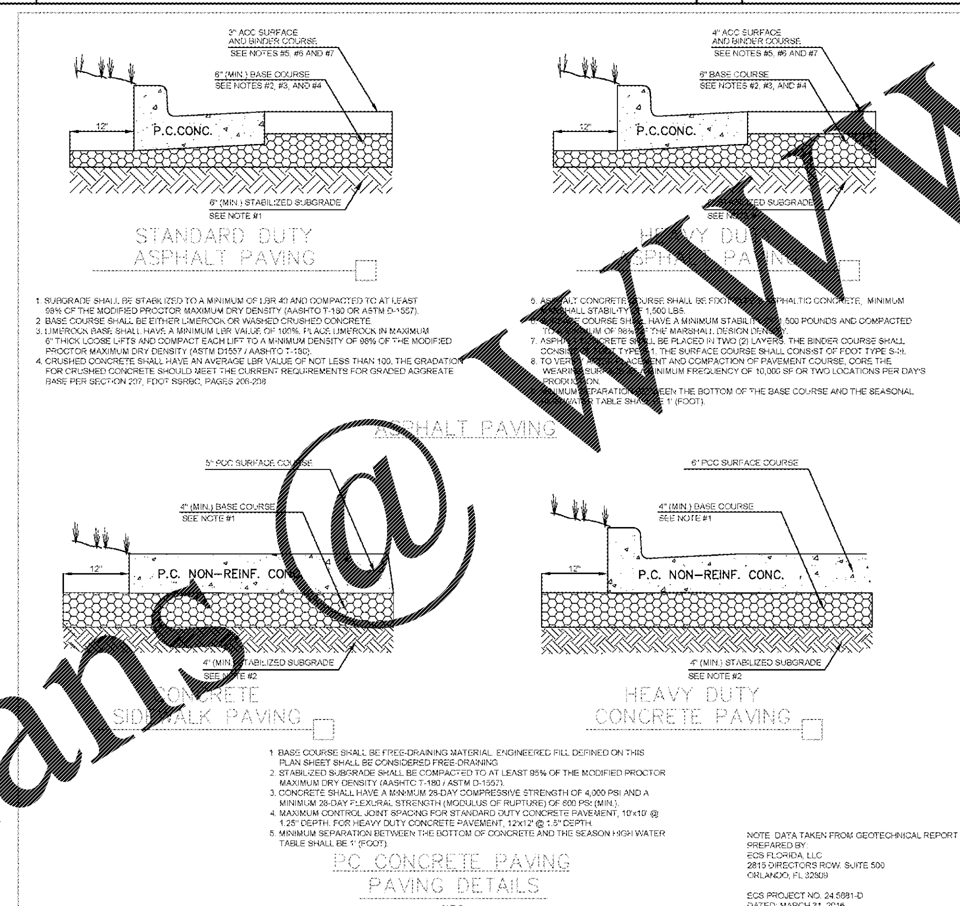

5

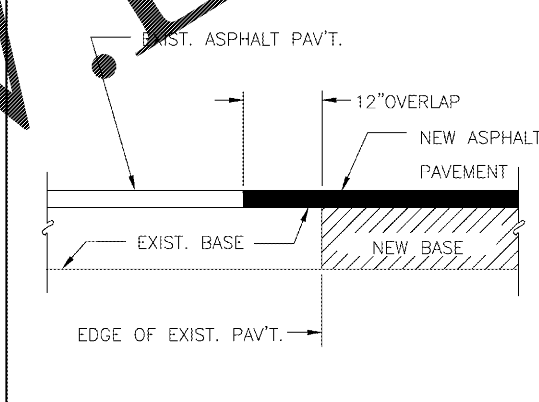

PAVEMENT SPLICE

NTS

6

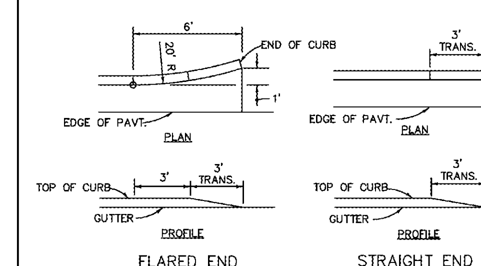

CURB AND GUTTER ENDINGS

NTS

7

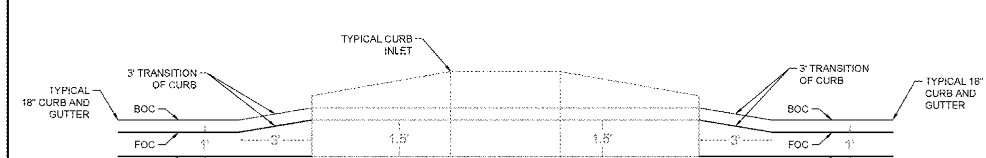

CURB INLET TO 18" CURB AND GUTTER DETAIL

NTS

8

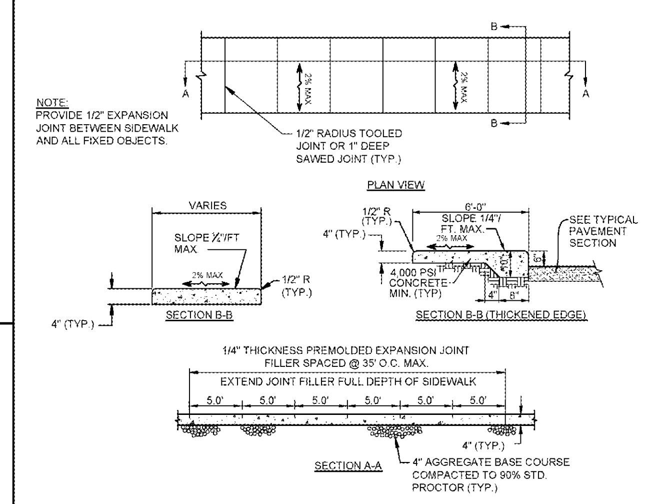

TYPICAL CONCRETE SIDEWALK DETAIL

NTS

9

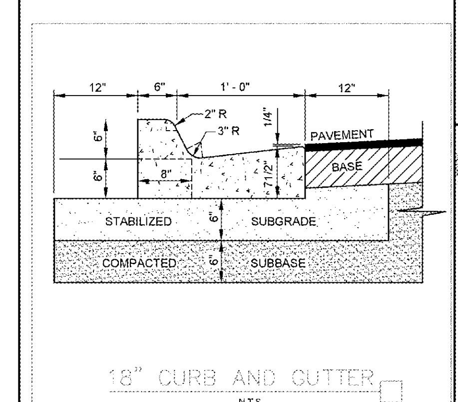

FOR INFORMATION ONLY

10

SEMINOLE COUNTY SP PROJ. #16-06000021

JOB #: 14043.21
PRJ. MGR: J.P.M.
DESIGNER: J.M.S.
CHECKED: J.P.M.

ENGINEER
JASON P. MARCHANT P.E.
FL. LIC. #

DATE: Apr. 11, 2017

REVISIONS

NO.	DATE

RECORD DRAWING

THIS RECORD DRAWING IS BASED ON THE RESULTS OF LIMITED PERIODIC FIELD OBSERVATIONS DURING CONSTRUCTION, A REVIEW OF CONTRACTOR FURNISHED REDLINED PLANS INDICATING CHANGES INCORPORATED DURING CONSTRUCTION, AND WITNESSED UTILITY TESTING OF DRINKING WATER AND WASTEWATER SYSTEMS. ALTHOUGH THE ACCURACY CAN NOT BE GUARANTEED, THE ENGINEER BELIEVES THIS RECORD DRAWING IS CORRECT TO THE BEST OF HIS/HER KNOWLEDGE.

ENGINEER:
FL. LIC. #

Walmart Neighborhood Market
#6894-0-NEW-FL-Apopka (Balmy Beach)
AT
BALMY BEACH DRIVE, SEMINOLE COUNTY, FLORIDA
FOR
TAURUS CD 186 BALMY BEACH FL LP

STANDARD DETAILS SHEET 1

Small Business Enterprise 1979-2016
LOCHRANE Consulting Engineers Surveyors
201 SOUTH BUMBY AVENUE - ORLANDO, FL 32803
PH: (407) 896.3317 | FAX: (407) 896.0187 | WWW.LOCHRANE.COM
CERTIFICATE OF AUTHORIZATION # 00002856

SHEET
C12

C:\Users\rbatewell\appdata\local\temp\AcPublish_1268\6600 – C12 – STANDARD DETAIL SHEET 1 – 6894–00.dwg – Apr 11, 2017 – 11:32am

Order Plans @ WWW.LDIILine.com