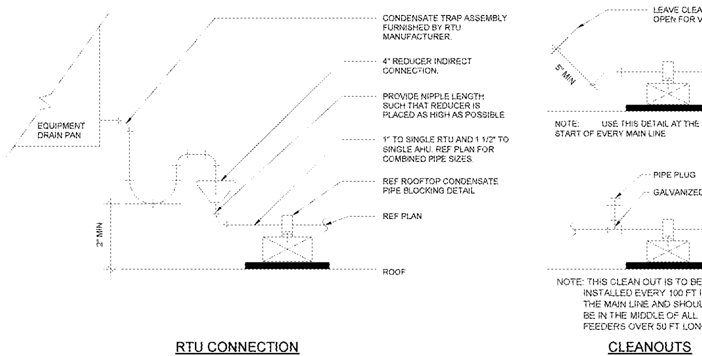


8 ROOFTOP CONDENSATE DRAIN
NTS

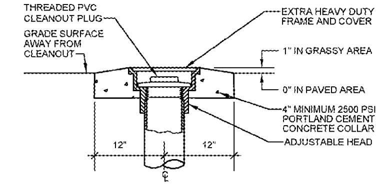


4 YARD CLEANOUT
NTS

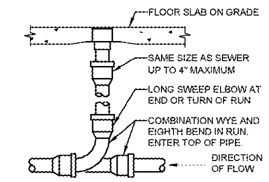


3 FLOOR CLEANOUT
NTS

## KEYNOTES

15.124 BLOCK OUT A 12" X 12" AREA AROUND EACH PUBLIC RESTROOM FLOOR DRAIN AT INITIAL SLAB POUR. AFTER RESTROOM WALLS ARE CONSTRUCTED, ALIGN DRAIN GRATE SQUARE TO WALLS AND SET IN CONCRETE PRIOR TO TILE INSTALLATION. VERIFY FINAL TILE HEIGHT BEFORE SETTING DRAIN. DO NOT SLOPE RESTROOM FLOOR TO DRAIN.

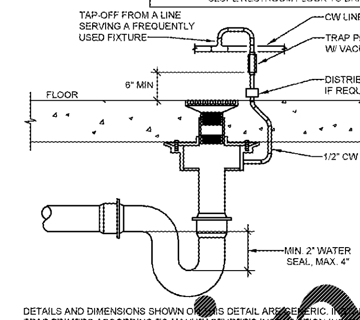


DETAILS AND DIMENSIONS SHOWN ON THIS DETAIL ARE GENERIC. INSTALL TRAP PRIMERS ACCORDING TO MANUFACTURER'S INSTALLATION INSTRUCTIONS.

7 WATER-SUPPLIED TRAP PRIMER
NTS

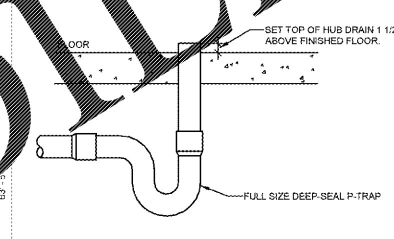


LOCATE HUB DRAIN WHERE SHOWN ON DIMENSIONED PLUMBING FLOOR PLAN.

6 HUB DRAIN
NTS

## GENERAL NOTES

1. SANITARY SEWER PIPING SHOWN IS BASED ON 1/4" PER FOOT FALL FOR ALL PIPING 2 1/2" AND SMALLER AND 1/8" PER FOOT FALL FOR ALL PIPING 3" TO 6". COORDINATE BUILDING SEWER LOCATION AND INVERT ELEVATION WITH CIVIL DRAWINGS.
2. LOCATIONS OF SPECIFIC SALES FLOOR CLEANOUTS HAVE BEEN COORDINATED WITH MERCHANDISE PLAN. LOCATE PER DIMENSIONS IF SHOWN ON PLANS. ADJUST CLEANOUT COVERS FLUSH WITH FINISHED FLOOR. REFER TO CLEANOUT DETAILS.
3. AT THE OPTION OF THE CONTRACTOR INSTEAD OF WATER-SUPPLIED TRAP PRIMERS, WATERLESS TRAP PRIMERS MAY BE USED IF APPROVED BY THE AUTHORITY HAVING JURISDICTION (AHJ). PROVIDE ADDITIONAL TRAP SEAL PRIMERS AS REQUIRED BY THE AUTHORITY HAVING JURISDICTION. REFER TO WATER-SUPPLIED TRAP PRIMER DETAIL AND SPECIALTY PLUMBING FIXTURE SCHEDULE.
4. INSTALL VTR'S A MINIMUM OF 2' FROM PARAPET WALL AND A MINIMUM OF 10 FT. FROM OUTSIDE AIR INTAKE OF ROOFTOP EQUIPMENT. REFER TO VTR DETAIL.
5. REFER TO RISER DIAGRAMS AND PLUMBING FIXTURE SCHEDULES FOR ALL PIPING AND PIPE SIZES NOT SHOWN ON PLANS.
6. FOR PIPING ROUTED ON EXTERIOR WALLS, ROUTE PIPING ON THE INTERIOR SIDE OF INSULATED WALL TO PROVIDE FREEZE PROTECTION.
7. REFER TO ARCHITECTURAL DRAWINGS FOR PIPING INSTALLATION AND SEALING REQUIREMENTS FOR DEVICES SHOWN ON COOLER/FREEZER PANELS. DO NOT INSTALL PIPING WITHIN COOLER/FREEZER PANELS.
8. PROVIDE ESCUTCHEON PLATES FOR PLUMBING PENETRATIONS THROUGH GROCERY CEILINGS AND WALLS.
9. PROVIDE AIR-TIGHT SEAL AROUND PIPING PENETRATIONS THROUGH COOLER/FREEZER WALLS AND CEILINGS. FINISH WITH ESCUTCHEON PLATE.
10. SET TOP OF FLOOR DRAINS, FLOOR SINKS, TRENCH DRAINS AND FLOOR CLEANOUTS FLUSH WITH FINISH FLOOR UNLESS KEYNOTED OTHERWISE.
11. PROVIDE ACCESS DOORS TO VALVES THAT ARE NOT READILY ACCESSIBLE.
12. INSTALL CONTINUOUS SEALANT JOINT AT ALL EXTERIOR WALL PENETRATIONS.
13. INSTALL CENTERLINE OF GROCERY AREA UTILITY WALL PENETRATIONS AND WALL CLEANOUTS AT 12"AFF MINIMUM, ABOVE TOP OF ARCHITECTURAL SANITARY COVE BASE, UNLESS NOTED OTHERWISE.
14. ALL FLOOR DRAIN OUTLETS SHALL BE SAME SIZE AS CONNECTING WASTE LINE UNLESS NOTED OTHERWISE FOR COMBINATION DRAIN/WASTE AND VENT SYSTEMS.
15. PIPING AND FIXTURES LOCATED ON SALES FLOOR COLUMNS SHALL BE INSTALLED ON BACK SIDE OF COLUMN.

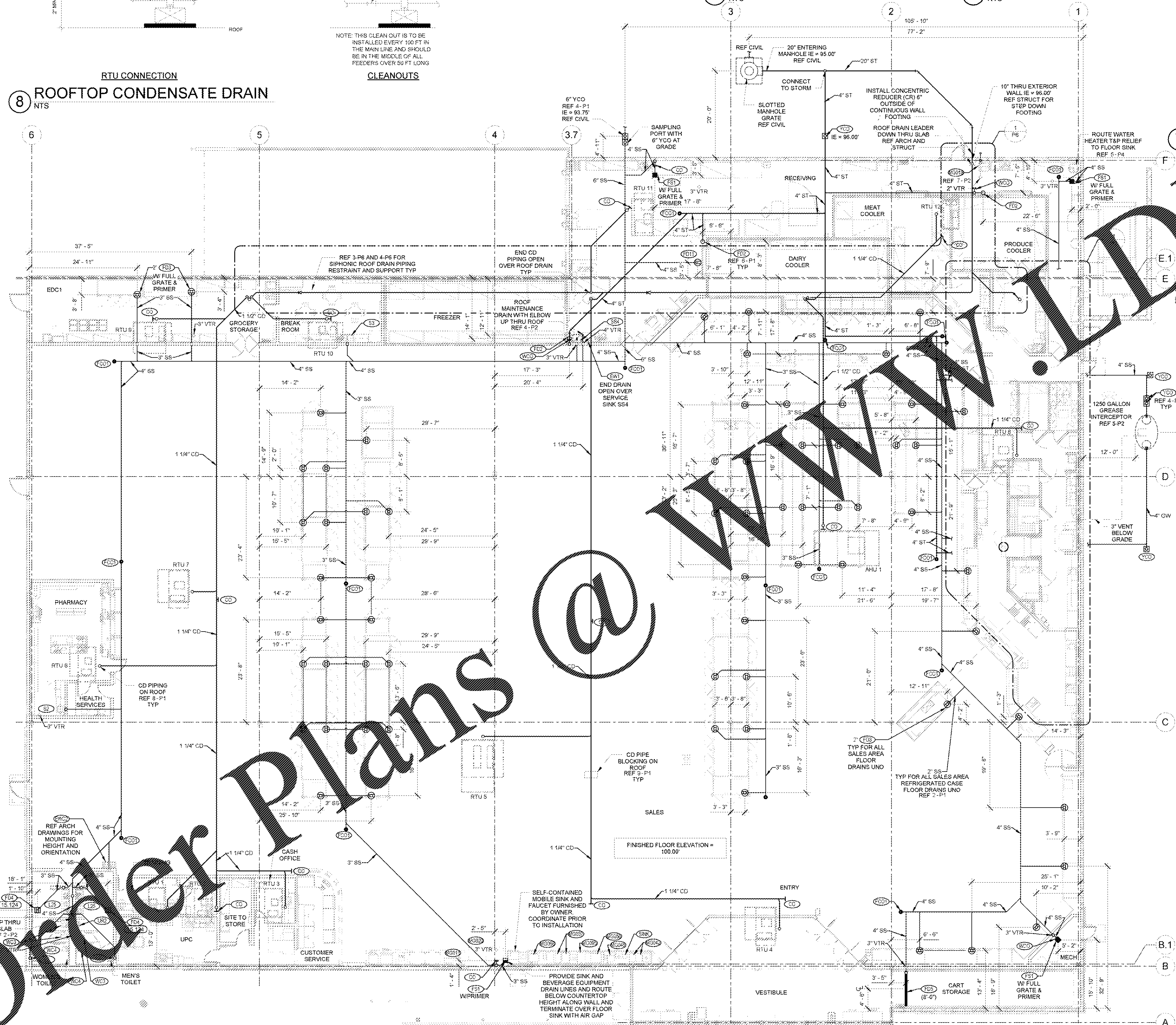


1 DWV PLAN
1" = 10'-0"
SCALE: 1"=10'-0"

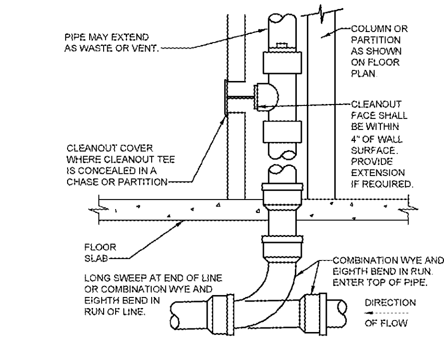


5 WALL CLEANOUT
NTS

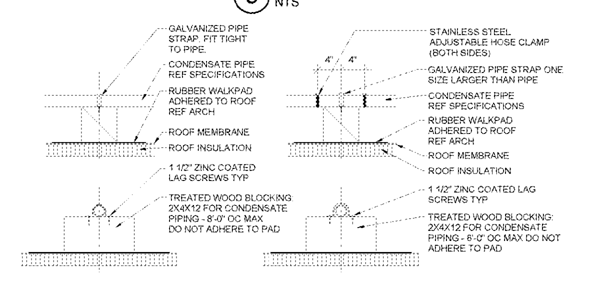


9 ROOFTOP CONDENSATE PIPE BLOCKING
NTS

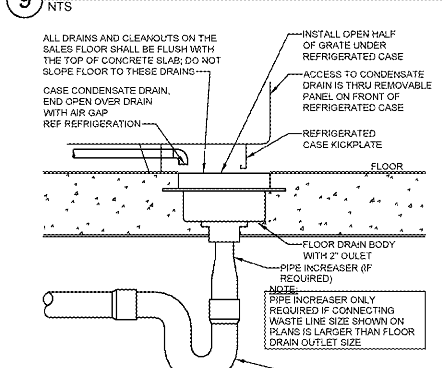


LOCATE FLOOR DRAIN WHERE SHOWN ON DIMENSIONED PLUMBING FLOOR PLAN

2 REFRIGERATED CASE DRAIN
NTS

STIPULATION FOR REUSE
THIS DRAWING WAS PREPARED FOR USE ON A SPECIFIC SITE AT APOPKA, FL CONTEMPORANEOUSLY WITH ITS ISSUE DATE ON 01/09/17 AND IT IS NOT SUITABLE FOR USE ON A DIFFERENT PROJECT SITE OR AT A LATER TIME. USE OF THIS DRAWING FOR REFERENCE OR EXAMPLE ON ANOTHER PROJECT REQUIRES THE SERVICES OF PROPERLY LICENSED ARCHITECTS AND ENGINEERS. REPRODUCTION OF THIS DRAWING FOR REUSE ON ANOTHER PROJECT IS NOT AUTHORIZED AND MAY BE CONTRARY TO THE LAW.

CONSULTANTS
MPW
MPW ENGINEERING, LLC

Walmart
APOPKA, FL
STORE NO. 6894
JOB NUMBER: 097-16-006 PROTO 41.2

| ISSUE BLOCK | | |
|---|---|---|
| 1 | 01/25/17 | REV #1 |
| 2 | 02/20/17 | REV #2 |
| 3 | 03/10/17 | REV #3 |
| 4 | 04/07/17 | REV #5 |

| | |
|---|---|
| CHECKED BY: | MMM |
| DRAWN BY: | TDT |
| FILE NAME: | P1 |
| PROTO CYCLE: | 10/28/16 |
| DOCUMENT DATE: | 01/09/17 |

BID SET. NOT FOR CONSTRUCTION

THIS ITEM HAS BEEN ELECTRONICALLY SIGNED AND SEALED BY SCOTT C WEBB, PE ON THE DATE AND/OR TIME STAMP SHOWN USING A DIGITAL SIGNATURE. PRINTED COPIES OF THIS DOCUMENT ARE NOT CONSIDERED SIGNED AND SEALED AND THE SIGNATURE MUST BE VERIFIED ON ANY ELECTRONIC COPIES.

DWV PLAN AND DETAILS

SHEET: P1

Order Plans @ www.LDILine.com