GENERAL SPRINKLER INFORMATION

1.	NAME AND LOCATION OF FACILITY:	WALMART #6894 - APOPKA, FL
2.	PRESENCE OF HPS/RACK STORAGE:	RECEIVING AREA
3.	MAXIMUM HEIGHT OF STORAGE:	13 FT AT RECEIVING; 12 FT AT SALES FLOOR
4.	AISLE WIDTH PLANNED:	4 FT AT RECEIVING, 5 FT AT SALES
5.	COMMODITY CLASSIFICATION:	CLASS I-IV
6.	ENCAPSULATION OF PALLET LOADS:	NONE
7.	PRESENCE OF SOLID SHELVING:	NONE
8.	FLOW TEST DATA:	REFER TO FP1, WATER SUPPLY INFORMATION
9.	PRESENCE OF FLAMMABLE/COMBUSTIBLE LIQUIDS:	COMPLIES WITH NFPA 30 AND FIRE CODE LIMITATIONS FOR MERCANTILE OCCUPANCY
10.	PRESENCE OF HAZARDOUS MATERIALS:	COMPLIES WITH FIRE CODE LIMITATIONS FOR MERCANTILE OCCUPANCY
11.	PRESENCE OF OTHER SPECIAL STORAGE:	NONE
12.	LOCATION OF AUX/LOW POINT DRAINS:	PER AS-BUILT SYSTEM AND PLANS
13.	ORIGINAL MAIN DRAIN FLOW TEST RESULTS:	CONTRACTOR TEST RESULTS TO BE DETERMINED
14.	INSTALLING CONTRACTOR:	CONTRACTOR NAME TO BE DETERMINED
15.	PRESENCE/LOCATION OF AUX SYSTEMS:	NONE

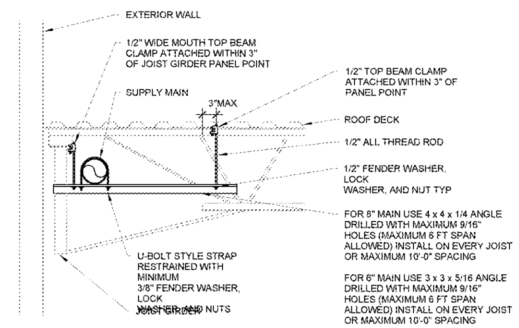

10 TRAPEZE SUPPORT
NTS

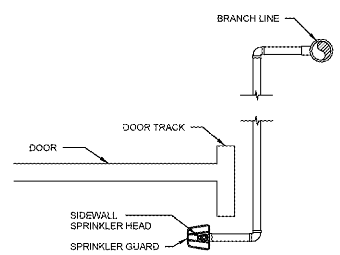

9 ROLL-UP DOOR
NTS

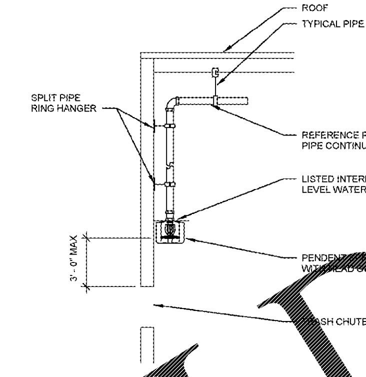

8 COMPACTOR SPRINKLER
NTS

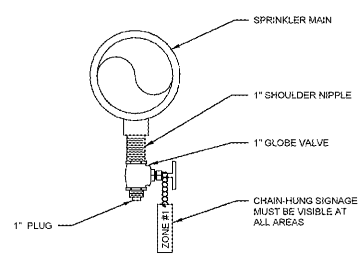

7 AUXILIARY DRAIN
NTS

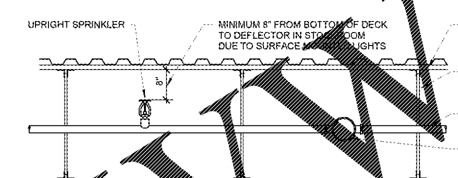

6 PIPING
NTS

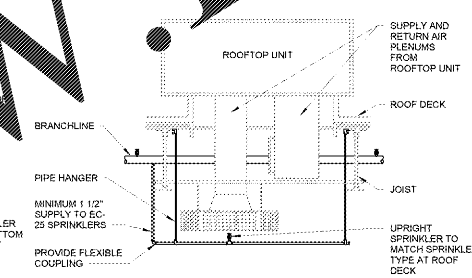

5 RTU SPRINKLER DROP
NTS

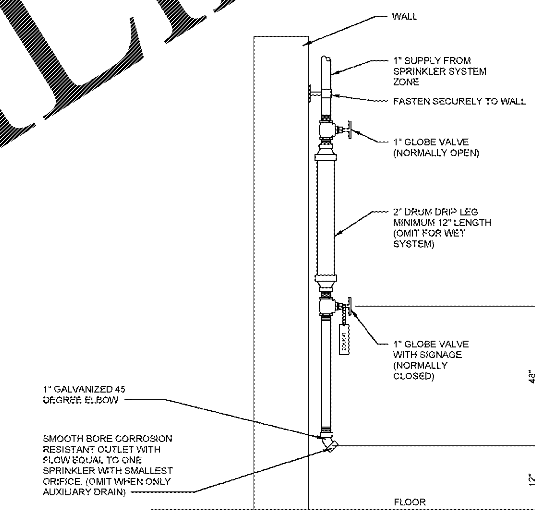

4 AUXILIARY DRAIN/ INSPECTOR'S TEST
NTS

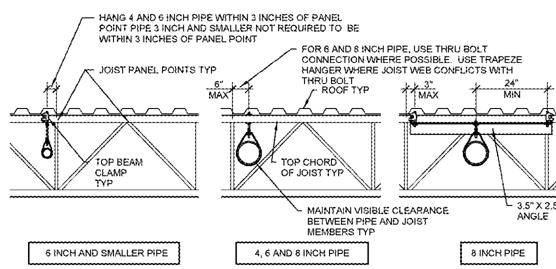

MAXIMUM HANGER SPACING FOR PIPING PERPENDICULAR TO JOISTS		
BEAM CLAMP NOT TRAPEZED	THRU-BOLT NOT TRAPEZED	BEAM CLAMP TRAPEZED
4" PIPE EVERY 12'-0" EVERY OTHER JOIST	4" PIPE EVERY 12'-0" EVERY OTHER JOIST	4" PIPE NOT NECESSARY
6" PIPE EVERY 6'-0" EVERY JOIST	6" PIPE EVERY 12'-0" EVERY OTHER JOIST	6" PIPE NOT NECESSARY
8" PIPE NOT ALLOWED	8" PIPE EVERY 6'-0" EVERY JOIST	8" PIPE EVERY 6'-0" EVERY JOIST

PIPE RUNNING PERPENDICULAR TO JOISTS

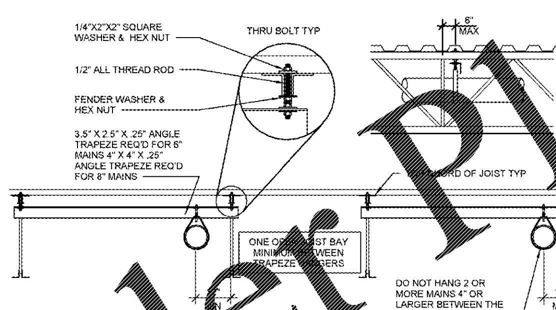

MAXIMUM HANGER SPACING FOR PIPES PARALLEL TO JOISTS		
PIPE EVERY 12'-0" NOT TRAPEZED BEAM CLAMP	PIPE EVERY 12'-0" TRAPEZED THRU BOLT	8" PIPE EVERY 12'-0" TRAPEZED THRU BOLT

PIPE RUNNING PARALLEL TO JOIST

CONTRACTOR MAY SUBSTITUTE ANGLE IRON TRAPEZE MEMBER WITH PIPE MEMBER. SIZE PIPE MEMBER IN ACCORDANCE WITH NFPA-13 AND MAINTAIN 12 INCH MAXIMUM DEFLECTOR DISTANCE

UTILIZE THESE HANGING METHODS FOR ALL SPRINKLER PIPING. SPACE TRAPEZE HANGERS IN ACCORDANCE WITH SCHEDULE. LOCATE HANGERS WITHIN 3 INCHES OF JOIST PANEL POINTS U.N.O.

NOTE: DO NOT SUPPORT SPRINKLER PIPING FROM BOTTOM CHORD OF BAR JOISTS

3 SPRINKLER PIPE SUPPORT
NTS

OPTION "A" INSTALLATION PROCEDURE

1. CORE DRILL 2 1/2" DIAMETER HOLE IN THE FREEZER/COOLER INSULATED CEILING PANEL. LOCATE HOLE AND REQUIRED SPRINKLER PROTECTION IN ACCORDANCE WITH NFPA 13 OBSTRUCTION CRITERIA (SSP TYPE SPRINKLERS). MAINTAIN 6" CLEARANCE FROM COOLER SEAMS.
2. INSTALL DRY PENDENT SPRINKLER PER MANUFACTURER'S INSTALLATION REQUIREMENTS.
3. COMPLETELY FILL ANNULAR CEILING OPENING BETWEEN THE ESCUTCHEON AND TOP OF CEILING PANEL WITH OPEN-CELL POLYETHYLENE FOAM BACKER ROD. EXPANDED FOAM IS NOT PERMITTED.
4. INJECT DOW CORNING 739 PLASTIC ADHESIVE SEALANT INTO AND AROUND THE TOP OF THE FREEZER/COOLER CEILING CORE OPENING IN ACCORDANCE WITH SEALANT MANUFACTURER'S INSTRUCTIONS.

OPTION "B" INSTALLATION PROCEDURE

1. CORE DRILL 2 1/2" DIAMETER HOLE IN THE FREEZER/COOLER INSULATED CEILING PANEL. LOCATE HOLE AND REQUIRED SPRINKLER PROTECTION IN ACCORDANCE WITH NFPA 13 OBSTRUCTION CRITERIA (SSP TYPE SPRINKLERS). MAINTAIN 6" CLEARANCE FROM COOLER SEAMS
2. INSTALL TYCO DRY PENDENT SPRINKLER PER MANUFACTURER'S INSTALLATION REQUIREMENTS. INSERT BOOT PRIOR TO MAKE-UP WITH PIPING.
3. COMPLETELY SEAL INTERFACE BETWEEN BOOT FLANGE AND TOP OF FREEZER/COOLER PANEL WITH ADHESIVE PROVIDED WITH BOOT IN ACCORDANCE WITH MANUFACTURER'S INSTRUCTIONS.
4. APPLY STRAP TIES ON BOOT AROUND DRY SPRINKLER BARREL PER MANUFACTURER'S INSTRUCTIONS.

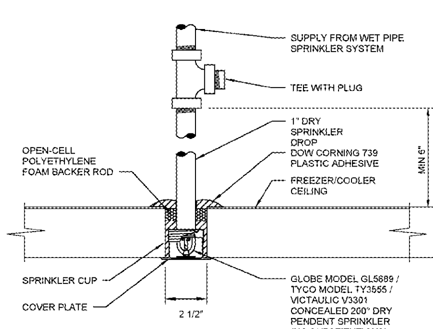

OPTION A

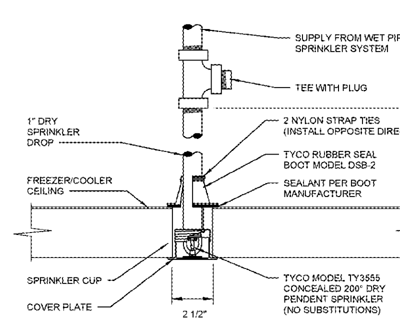

OPTION B

NOTE: CONTRACTOR TO SEAL DRY PENDENT SPRINKLERS AT FREEZER/COOLER USING ONE OF THE OPTIONS ABOVE. NO OTHER SEALANTS ARE PERMITTED

2 FREEZER/COOLER DRY PENDENT
NTS

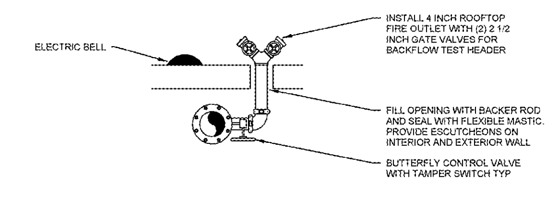

PLAN VIEW

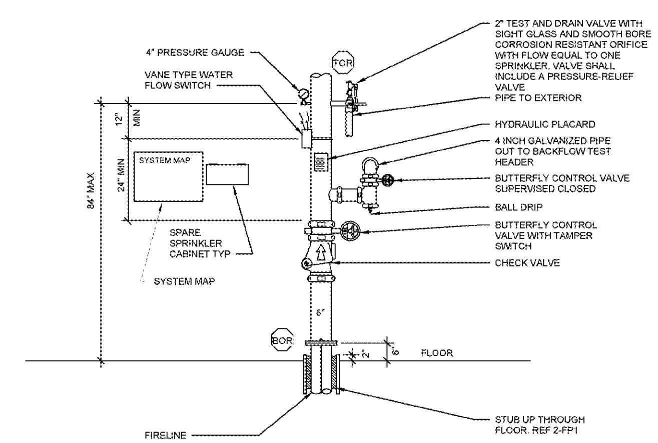

ELEVATION VIEW

1 SPRINKLER RISER
NTS

STIPULATION FOR REUSE

THIS DRAWING WAS PREPARED FOR USE ON A SPECIFIC SITE AT APOPKA, FL CONTEMPORANEOUSLY WITH ITS ISSUE DATE ON 01/09/17 AND IT IS NOT SUITABLE FOR USE ON A DIFFERENT PROJECT SITE OR AT A LATER TIME. USE OF THIS DRAWING FOR REFERENCE OR EXAMPLE ON ANOTHER PROJECT REQUIRES THE SERVICES OF PROPERLY LICENSED ARCHITECTS AND ENGINEERS. REPRODUCTION OF THIS DRAWING FOR REUSE ON ANOTHER PROJECT IS NOT AUTHORIZED AND MAY BE CONTRARY TO THE LAW.

CONSULTANTS

MPW

MPW ENGINEERING, LLC

Walmart

APOPKA, FL

STORE NO. 6894

JOB NUMBER: 097-16-006 | PROTO 41.2

ISSUE BLOCK

CHECKED BY:	MWA
DRAWN BY:	RJB
FILE NAME:	FP3
PROTO CYCLE:	10/28/16
DOCUMENT DATE:	01/09/17

BID SET.
NOT FOR
CONSTRUCTION

THIS ITEM HAS BEEN ELECTRONICALLY SIGNED AND SEALED BY SCOTT C WEBB, PE ON THE DATE AND/OR TIME STAMP SHOWN USING A DIGITAL SIGNATURE. PRINTED COPIES OF THIS DOCUMENT ARE NOT CONSIDERED SIGNED AND SEALED AND THE SIGNATURE MUST BE VERIFIED ON ANY ELECTRONIC COPIES.

FIRE PROTECTION DETAILS

SHEET: FP3

Order Plans @ WWW.LDILine.com