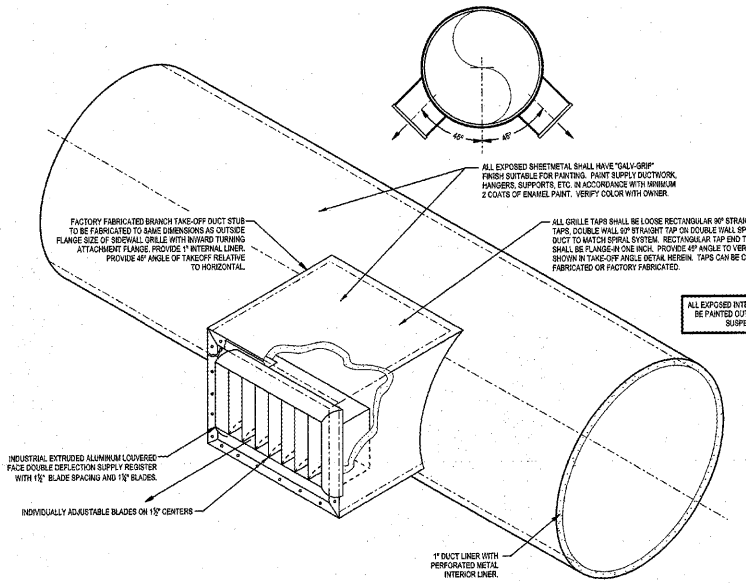

GYMNASIUM GRILLE INSTALLATION DETAIL IN EXPOSED ROUND DUCT
SCALE: NONE

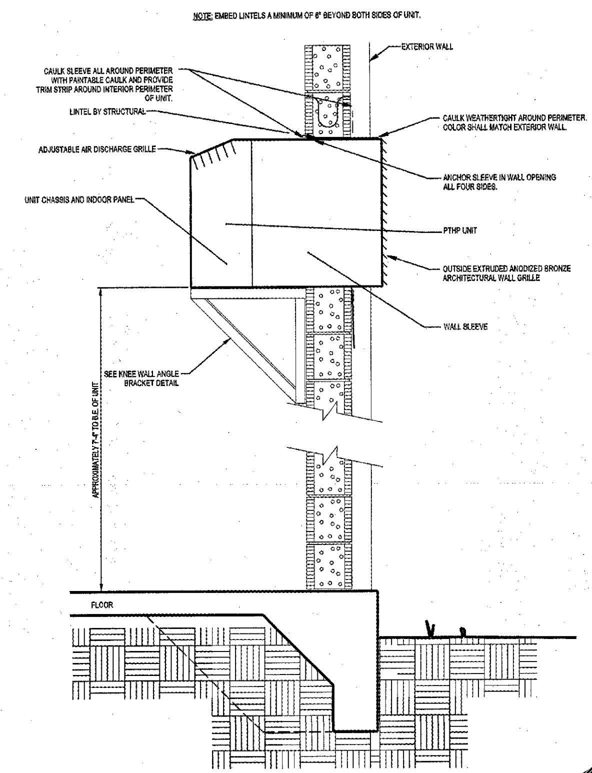

PACKAGED TERMINAL HEAT PUMP DETAIL
SCALE: NONE

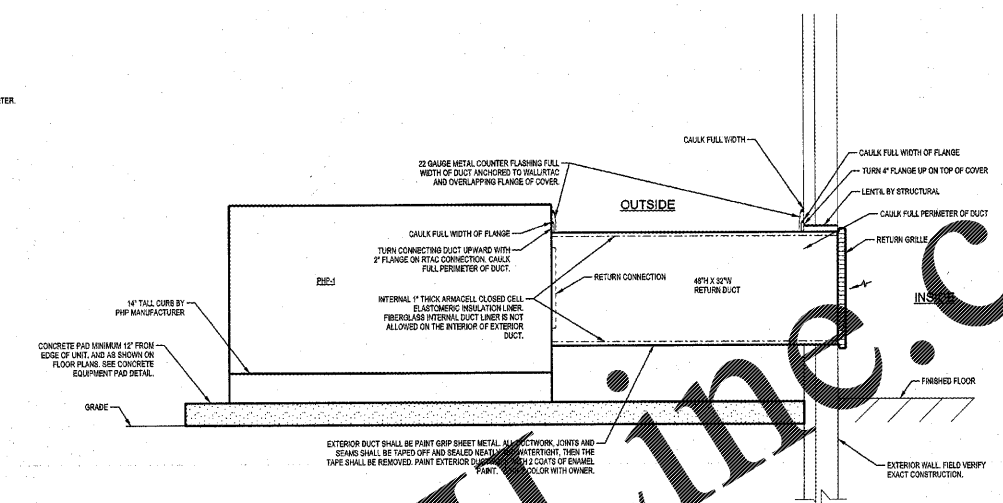

PHP RETURN DUCT DETAIL
SCALE: NONE

NOTE: CONTRACTOR SHALL CONFIRM ELEVATION DIFFERENCE BETWEEN OUTSIDE GRADE AND FINISHED FLOOR. IF ANY DIFFERENCE, OFFSET FROM RTAC CONNECTION AND BOTTOM SUCH THAT TOP OF RETURN DUCT IS LEVEL IF POSSIBLE.

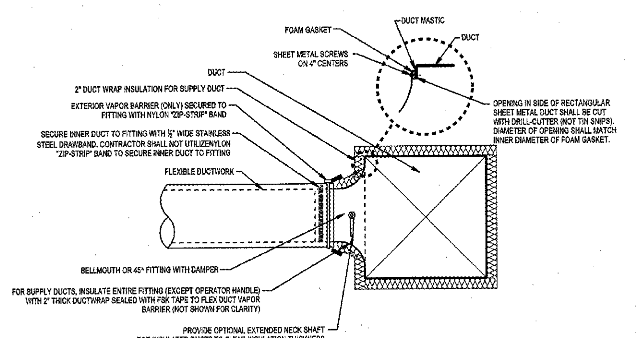

BELLMOUTH AND 45° FITTING TAKEOFF DETAIL
SCALE: NONE

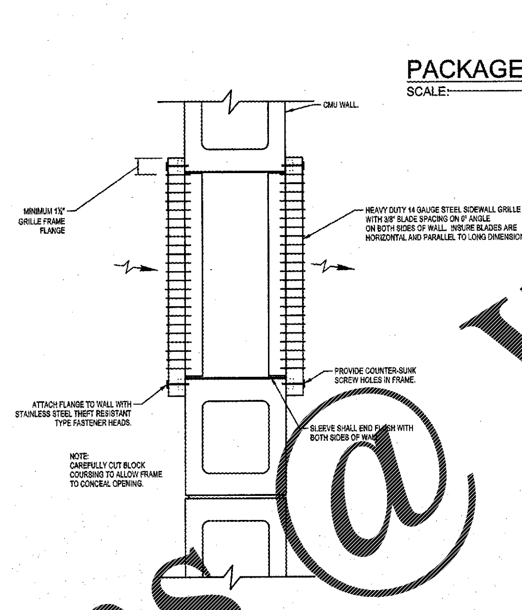

TRANSFER GRILLE DETAIL
SCALE: NONE

NOTE: DETAIL IS TYPICAL FOR ALL FLEX DUCT RUNOUTS TO DIFFUSERS.

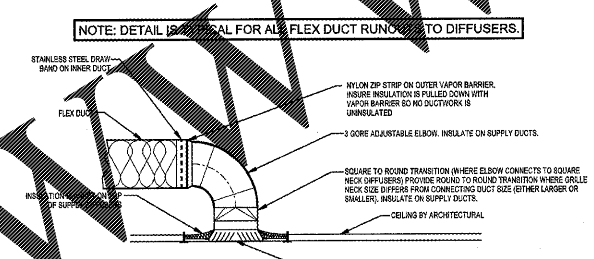

CEILING GRILLE DUCT CONNECTION DETAIL
SCALE: NONE

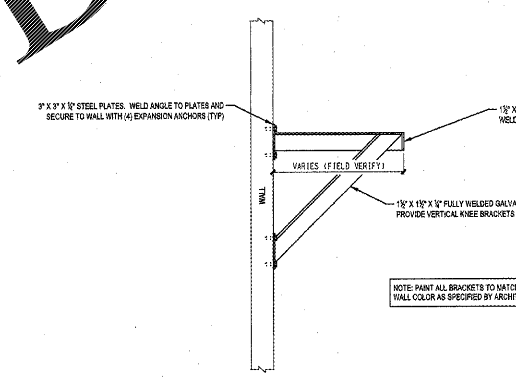

KNEE WALL ANGLE BRACKET DETAIL
SCALE: NONE

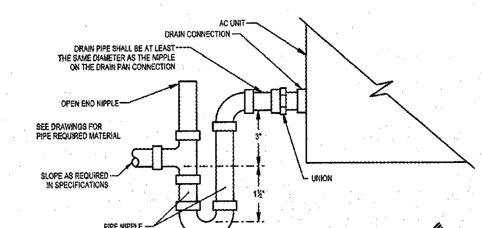

CONDENSATE DRAIN TRAP DETAIL
SCALE: NONE

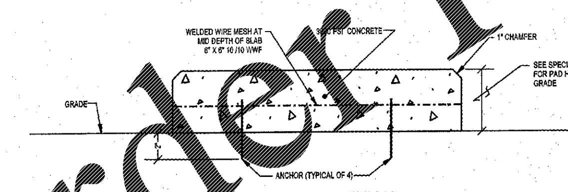

CONCRETE EQUIPMENT PAD DETAIL
SCALE: NONE

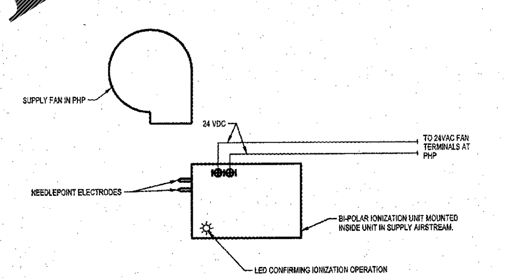

BI-POLAR IONIZATION CONTROL DETAIL
SCALE: NONE

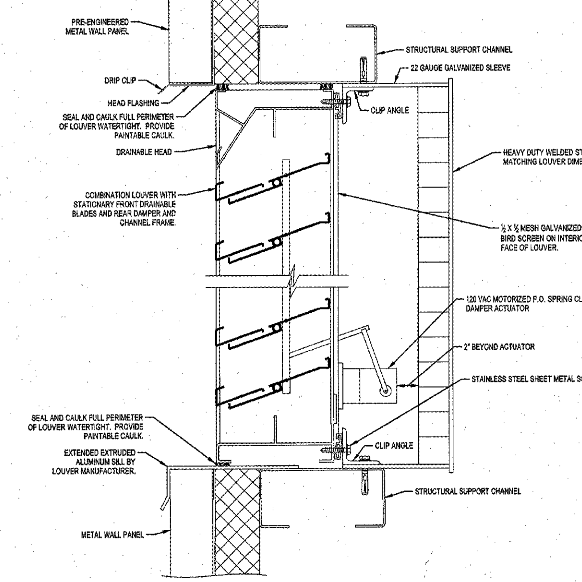

COMBINATION LOUVER IN METAL PANEL WALL DETAIL
SCALE: NONE

NOTE: ALL FLASHING AND WATERPROOFING OF WALL PENETRATIONS SHALL BE MADE IN STRICT ACCORDANCE WITH PRE-ENGINEERED METAL BUILDING MANUFACTURER'S INSTRUCTIONS.

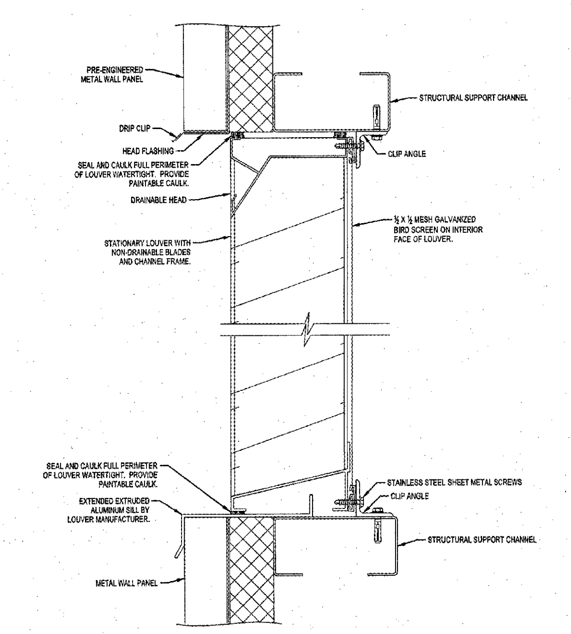

STATIONARY LOUVER IN METAL PANEL WALL DETAIL
SCALE: NONE

NOTE: ALL FLASHING AND WATERPROOFING OF WALL PENETRATIONS SHALL BE MADE IN STRICT ACCORDANCE WITH PRE-ENGINEERED METAL BUILDING MANUFACTURER'S INSTRUCTIONS.

Order Plans @ WWW.LDILine.com

ISSUANCES

DATE	DESCRIPTION
03.23.2017	Bid

KEYPLAN

AH&P CONSULTING ENGINEERS
ANDREWS, HAMMOCK & POWELL, INC.
250 Charter Lane
Suite 100
MACON, GEORGIA 31210
MACON (478) 405-8301
FAX (478) 405-8210
WWW.AHPENGR.COM

GEORGIA REGISTERED No. 17029 PROFESSIONAL ENGINEER JAMES A. ANDREWS, JR.

STATE OF GEORGIA W. VILLOT SMITH JR. REGISTERED ARCHITECT

Manley Spangler Smith Architects
A Professional Corporation
525 East Taylor St.
P.O. Box 880
Griffin, Georgia 30224
Office 770.227.5473
Fax 770.228.3442

PROJECT:
Whitewater High School Muliti-purpose Building

CLIENT:
Fayette County Schools

SHEET TITLE:
MECHANICAL DETAILS

FACILITY CODE:

© 2017 Manley Spangler Smith Architects, PC

PROJECT NUMBER:	201629
DATE:	03.23.2017
SCALE:	1/8"=1'-0"
DRAWN BY:	WDD
CHECKED BY:	JDR

SHEET NO.: M501