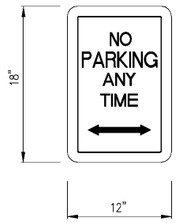

R7–1

1 / C1.2 NO PARKING ANY TIME SIGN
NO SCALE

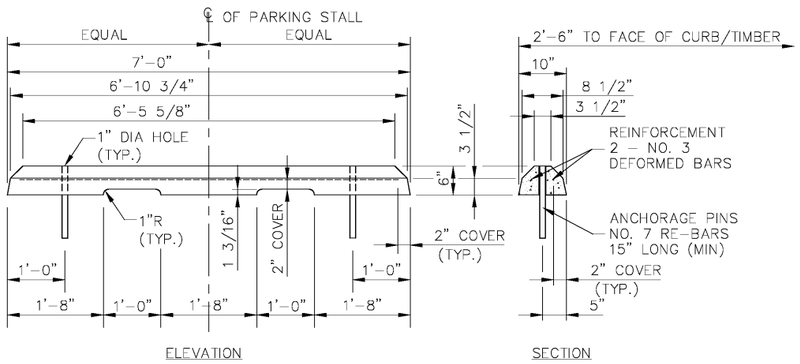

• PLACE CONCRETE WHEEL STOP 2'–6" FROM FACE OF CURB

4 / C1.2 CONCRETE WHEEL STOP DETAIL
NOT TO SCALE

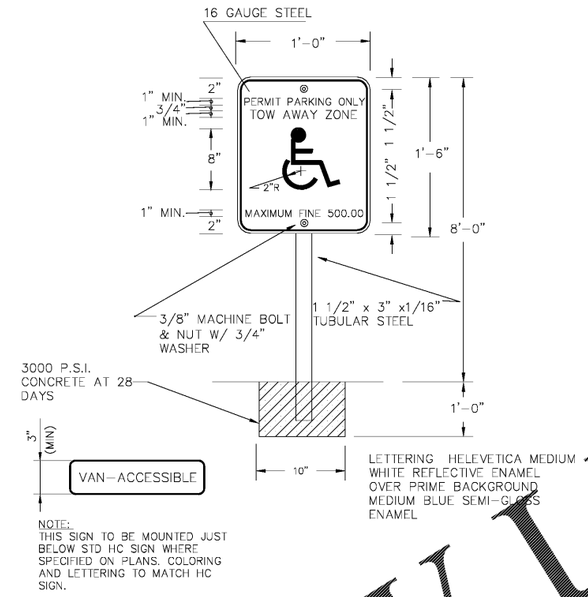

2 / C1.2 ACCESSIBLE PARKING SIGN DETAIL
N.T.S.

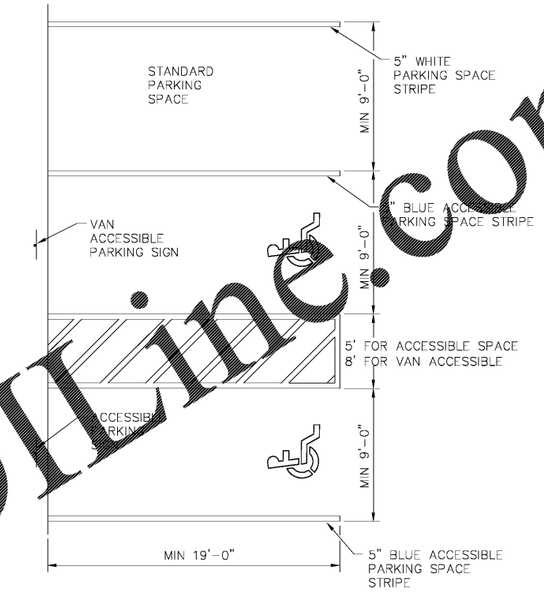

3 / C1.2 STANDARD & ACCESSIBLE PARKING SPACES
N.T.S.

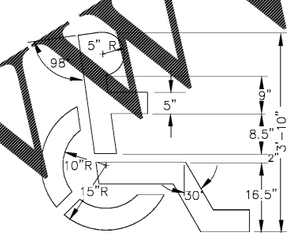

5 / C1.2 ACCESSIBLE PARKING SPACE INSIGNIA
N.T.S.

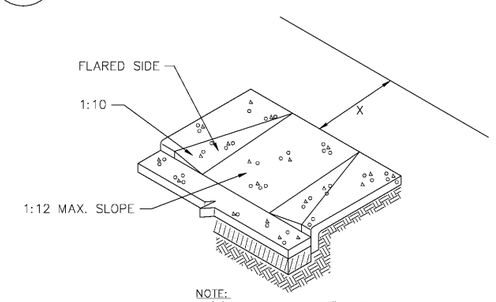

6 / C1.2 HANDICAPPED RAMP
N.T.S.

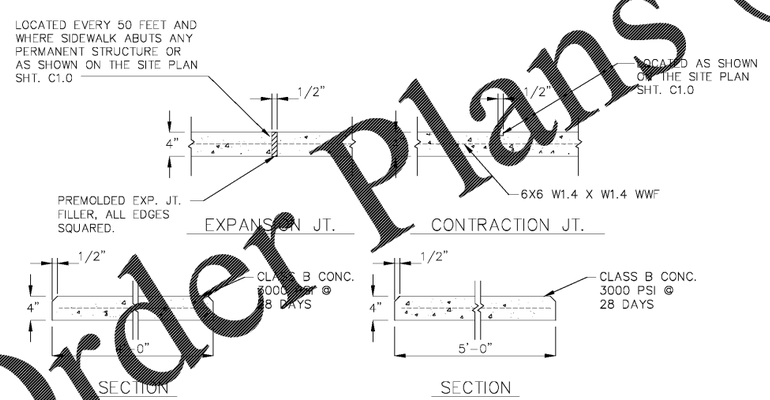

7 / C1.2 SIDEWALK DETAIL
NOT TO SCALE

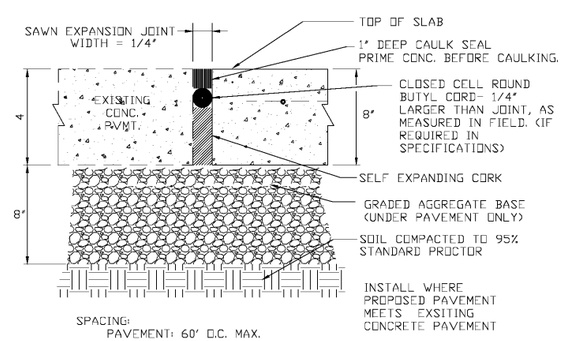

8 / C1.2 EXPANSION JOINT DETAIL
N.T.S.

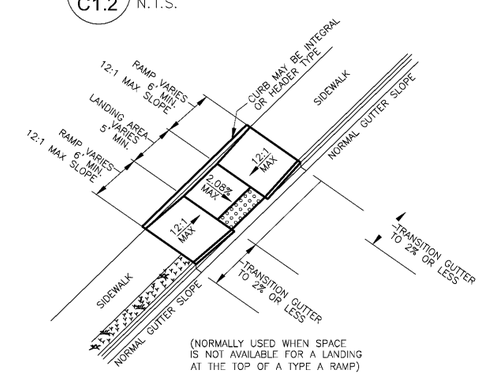

TYPE B
8 / C1.2 HANDICAPPED RAMP

SITE DETAILS

Order Plans @ WWW.LDIline.com

Hoffman and Company
Architects, Planners
229 Peachtree Street, N.E., Suite 2000
Atlanta, Georgia 30303
404 577-4000 FAX: 404 577-7119

SKYLINE
DESIGN
P:888.706.0661 F:770.217.7530 www.skyline-dc.com

SYMBOL	DATE	BY	REVISION

SEAL

CLIENT: City of Dunwoody

PROJECT: Baseball Facilities at Brook Run Park

DESIGNED: MDC | DRAWN: BKJ | CHECKED: | DATE: 04/12/2017 | SCALE:

PROJECT NO.

DRAWING TITLE: SITE DETAILS

DRAWING NO. C-1.2

SHEET OF